PFAFF®

3538-5/01

Parts and Instruction manual

Date 10/96

1 Safety

1.1 Guidelines

1.2 General notes on safety

1.3 Safety photographs

1.4 Special notes for the machine owner

1.5 Operators and service personnel

1.5.1 Operators

1.5.2 Service personnel

2 Defined use of machine

3 Specifications

4 Disposal of machine

5 Notes on tests according to EN 60204 - 1

6 Work photographs

7 Installation and initial operation of machine

7.1 Installation

7.2 Initial operation

7.2.1 Connection of machine

7.2.2 Inspections

7.2.3 Switching on the machine

7.2.4 Switching off the machine

7.3 Inserting the needle

8 Operation

8.1 Control panel

8.2 Parameter list

8.3 Conditioning unit

8.4 Error message

9 Sewing

9.1 Threading the sewing head

9.2 Sewing cycle

9.3 Feeding system

10 Care and maintenance

10.1 Air filter / lubricator

10.2 Water trap

10.3 Air filter

10.4 Maintenance

11 Adjustments

11.1 Sewing machine basic adjustments

11.2 Sewing machine stitch length

11.3 Feed dog adjustment

11.4 Presser foot adjustment

11.5 Needle thread pick up

11.6 Looper thread pick up

11.7 Attachment adjustment

12 Trouble shooting

13 Diagrams

13.1 Circuit diagrams

13.2 Pneumatic diagram

14 Leaflets

15 Spare part list

1 Safety

1.1 Guidelines

The EAG 3538-5/01 was built in compliance with the following European regulations:

- EG-Guideline on Machinery (89/392/EWG, 93/368/EWG, 93/44/EWG, 93/68/EWG)

- Law on Safety of Equipment, Decree on Machinery - 9GSGV

- EN 60204-1 Safety on Machinery, Elektrical Equipment of Industrial Machines, Part 3

- EN 292 Parts 1 and 2: 1991 Safety of Machinery (basic concepts)

- EN 294 Safety of Machinery; Safety distances to keep upper extremities from reaching dangerous areas

- EN 349 Safety of Machinery; minimum distances to avoid injuries to parts of the body

- EN 418 Safety of Machinery; Emergency OFF devices

In addition to this Instruction Manual you should make sure to observe other generally applicable regulations and legal provisions as well as valid envirommental instructions! Regulations of local trade associations or other supervisory authorities must be followed!

1.2 General notes on safety

- Before operating the machine for the first time make sure the pertaining Instruction Manual and the PEGASUS EX 2242-52P2 Operation Manual have been read.
  The machine must only be operated by personnal trained accordingly.

- Before putting the machine into operation it is necessary to read the safety instructions and the Instruction Manual of the motor manufacturer.

- The machine must only be applied for its defined use and only with the safety devices it is equipped with; all known safety instructions must be followed.

- When exchanging gauge parts (such as needles, presser foot, needle plate or feed dog), when threading the machine or when leaving the workplace as well as during maintenance work the machine must be switches off at the master switch or by pulling the mains plug out of its socket.

- Daily maintenance work must only be carried out by trained personnel.

- Repairs and special maintenance work must only be carried out by specialist staff or personnal trained accordingly.

- Maintenance and repair work on pneumatic equipment must only be carried out after diconnecting the machine from the pneumatic supply net. The only permissible exceptions are maintenance work and functional tests by trained personnel!

- Work on electrical equipment of the machine must only be carried out by qualified personnel.

- It is prohibited to work on live parts and devices. Exceptions are subject to regulations EN 50110.

- Conversions and modifications of the machine must only be carried out under observations of the appropriate safety instructions.

- For repairs use only the spare parts released by us for use. We draw special attention to the fact that spare and accessory parts not provided by use have not been tested and released by us.
  Fitting and / or using such parts may have negative effects on certain constructive properties of the machine.
  We do not accept any liabillity for damages occuring due to the use of other than our original spare parts!

1.3 Safety photographs

Dangerous area!
Special attention required!

Risk of injuries for operators and service personnel!

1.4 Special notes for the machine owner

- This Instruction Manual is an integral part of the machine and must always be readily available to the operating personnel.
  Before initial operation of the machine it is necessary to read this Instruction Manual.

- Operating and service personnel is to made familiar with the safety devices of the machine as well as with safe working methods.

- The owner of the machine is responsible that the machine is only operated when in good working order.

- The owner of the machine must ensure that only authorized personnel operate the machine.

Should you have questions please get in touch with your sales agency.

1.5 Operators and service personnel

1.5.1 Operators

Operators are in charge of preparing, operating and cleaning the machine as well as of eliminating disturbances in the sewing area.

Operators are committed to the following:

- during all worksteps to the follow the safety regulations indicated in the Instruction Manual.

- to refrain from any operating method that may interfere with the safety of the machine

- to wear tightly fitting clothes and not wear any jewellery such as necklaces or rings

- to see to it that the machine is operated by authorized personnel only

- to inform the owner of the machine immediately of any modification that may affect the safety of the machine.

1.5.2 Service personnel

Service personnel are persons trained and skilled in electrical engineering, electronics and mechanics.
They are in charge of lubricating, repairing and adjusting the machine.

All service personnel is commmitted to the following:

- To observe all safety instructions indicated in the Instruction Manual when doing repair or service work.

- Before any servicing work the master switch must be turned off and secured against being switched on again.

- Work on live parts and equipment is prohibited. Permissible exceptions are set forth in regulations EN 50110.

- For servicing or repair work on its pneumatic equipment the machine must be separated from its pneumatic connection.
  The only permissible exceptions are functional tests.

- At the end of repair and servicing work all guards must be replaced and the control box must be closed again.

2 Defined use of machine

Fully automatic sewing unit for hemming jeans trouser pockets.

The unit is easy to handle which allows short and easy training.

Any applications of the machine not authorized by the manufacturer is considered to be beyond the defined use of machine.
The menufacturer cannot be held liable for damages occuring on the grounds of unauthorized use of the machine!
Conduction of all opertional, adjustment, maintenance and repair work as provided for by the manufacturer is considered to be part of the authorized use of the machine.

3 Specifications

- Sewing head:	PEGASUS EX 2242-52P1
- Stitch type:	401 (2-needle, 2-thread chainstitch)
- Stitch counting:	4.000 stitches/min.
- Needle system:	B27 - 120
- Stitch length:	max. 4,5 mm
- Sewing motor:	QUICK - ROTAN P 117 SE
- Sewing speed:	5.000 min.
- Pressure (supply):	8 bar
- Air consumtion:	6 bar

Dimensions of the unit (mechanised sewing unit)

- Length:	1.70 m or 2,05m with trurning-table-stacker
- Width:	0.80 m
- Height:	1.60 m incl. Thread stand

4 Disposal of machine

- Proper disposal of the machine falls to the buyer of the machine.

- The materials used in the 3538-5/01 are steel, aluminium, brass and several synthetics. The electrical equipment consists of synthetic materials and copper parts.

- Make sure disposal of the machine complies with locally applicable environmental protection regulations.

All oil containers and oil tubes must be disposed of separately in compliance with locally valid environmental protection regulations.

5 Notes on tests according to EN 60204 - 1

Before delivery of the machine it was tested according to EN 60204 - 1
The tests conducted were are follows.

- Uninterrupted connections of the earth wires
  a) Visual check
  b) Check of firm connection of earth wire

- Isolation testing

- Voltage testin

- Functional test

6 Work photographs

Several symbols are used in this Instruction Manual.
In the following the symbols and their meanings are listed:

Cleaning, maintenance

Lubricating, greasing, oiling

Servicing, repair, attendance

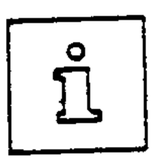

Notes, information

7 Installation and initial operation of machine

In case of a transit damage notify the forwarding agent and the PFAFF agency responsible.

Only skilled service personnel are allowed to set up and commission the machine! In doing so, all valid safety instructions must be followed!

7.1 Installation

- Lift machine off transit pallet by means of a fork-lift truck

- Lower machine on floor and move feet to level it out.

Suitable power and compressed air connections must be available at the site where the machine is set up.
Even, firm ground as well as sufficient light are prerequisites for installation of the machine.

7.2 Initial operation

7.2.1 Connection of the machine

- The machine, electrical wires and pneumatic connection tubes must be checked for possible damages.

- Connect the machine to the mains supply.
  Permissible operation voltage rating (see Fig. 4). connection only permissible if mains and operation voltage comply.
  The machine must only be connected at an earthed socket.

- Connect the machine to the compressed air system.
  Connect compressed air tube (inside diameter 6 mm to clutch piece (Fig. 8; item **1**)

Minimum mains pressure:	7 bar
Operating pressure:	6 bar
Pressure control:	Valve (Fig. 8; item **2**)

On maschines which are operated for the first time or which have been idle for 2 or 3 months it is absolutely necessary to check the oil feed!
Clean the machine thoroughly!

7.2.2 Inspections

- Lubrication in the sewing machine should be checked like shown in the instruction book of the PEGASUS EX 2242

- Air filter / lubricator

The air filter should bee clean Fig. 8.
To clean it see Cap. 10.3

Have service mechanic check whether the motor may be operated at the existing mains voltage and whether its connection in the terminal box is alright.
In case of any deviation the machine **must not be operated**!

7.2.3 Switching on the machine (Fig. 1)

- Before switching on the machine check air and electrical connections. Set air pressure at 6 bar.

- Turn the master switch to the right.
- The sewing unit is switched on when the master switch is set at "ON"

7.2.4 Switching off the machine (Fig. 2)

- Turn master switch to the left.
- The sewing unit is switched off when the master switch is set at "OFF".

If necessary, the machine can now be disconnected from the pneumatic end electric cource supply.

7.3 Inserting the needle (Fig. 3)

Use needle system B 27 - 120 only.

Before inserting the needle switch the machine off. Loosen needle set screw anf if necessary remove the old needle. Now, insert the new needle into the needle bar pushing it up as far as it will go and twisting it until the clearance cut points to the back. Afterwards retighten the needle set screw again.

Caution - needle point!
Risk of injury!

Fig. 1

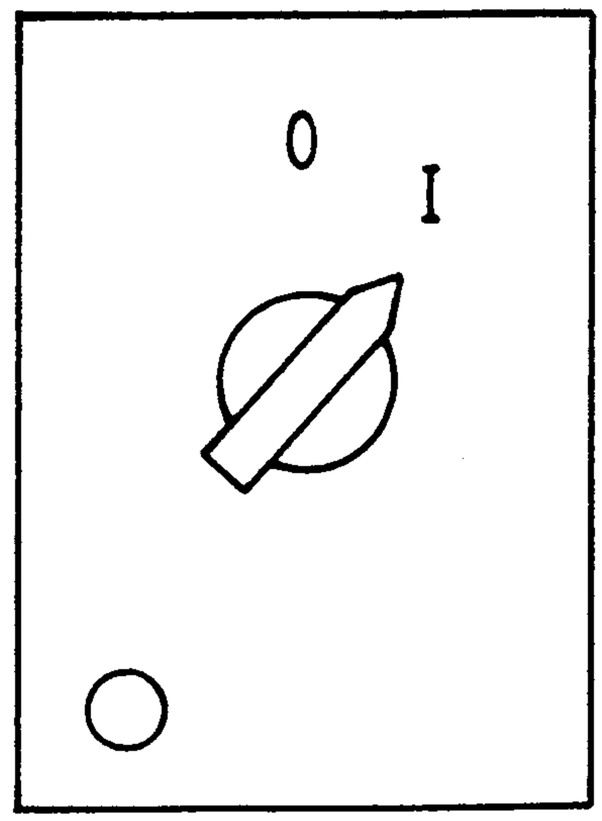

Fig. 2

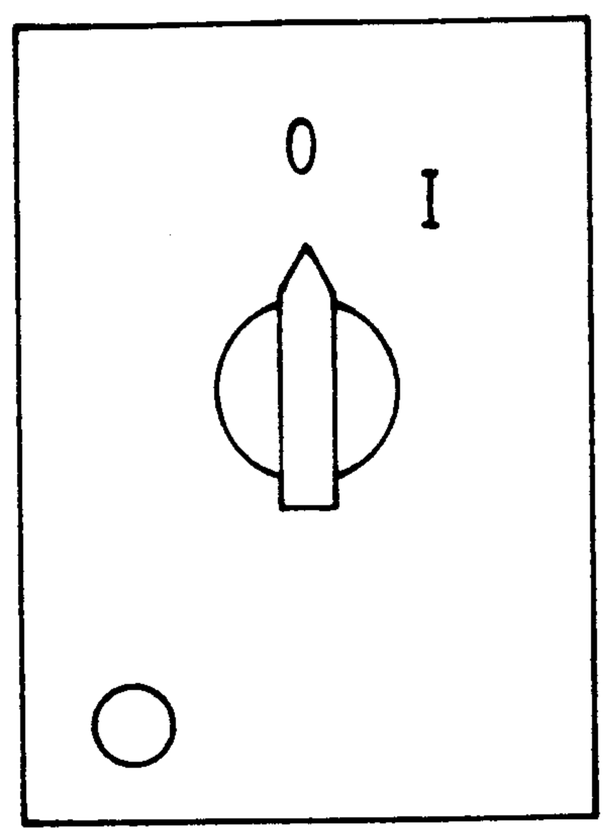

Fig. 3

TEST SEWING

Replacing the needle

- Check the needle carefully to see that the scarf is turned to the rear of the machine.
- Insert the needle to the proper depth, and fasten securely.

Standard needle	: ORGAN DC × 27, SCHMETZ B-27
EX3200H•5200H series	: ORGAN, SCHMETZ DO×5

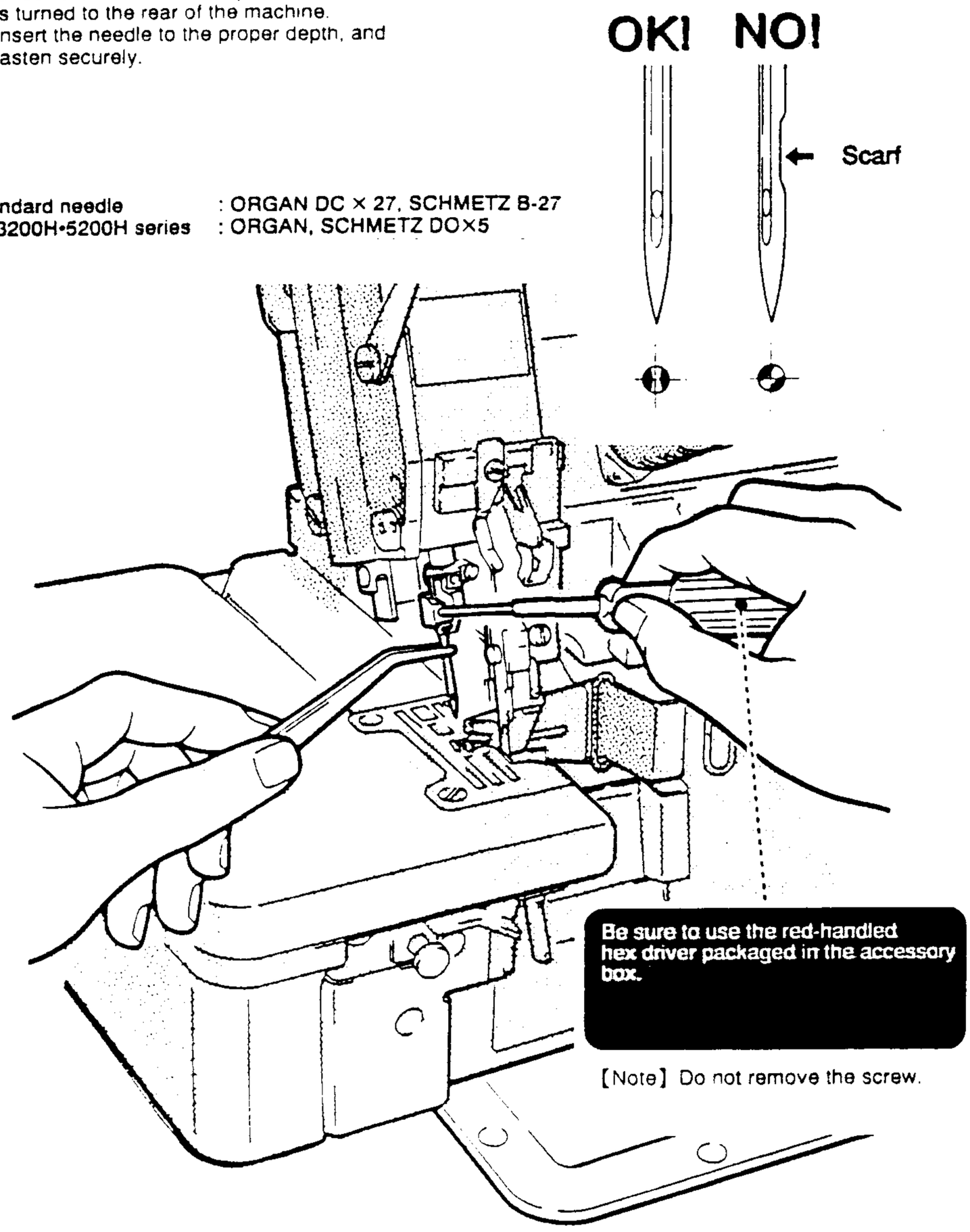

[Note] Do not remove the screw.

Fig. 4

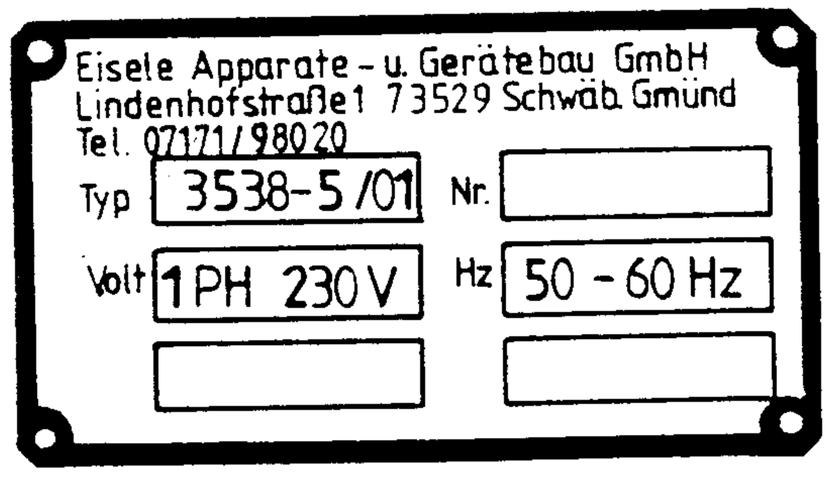

8 Operation

8.1 Control panel

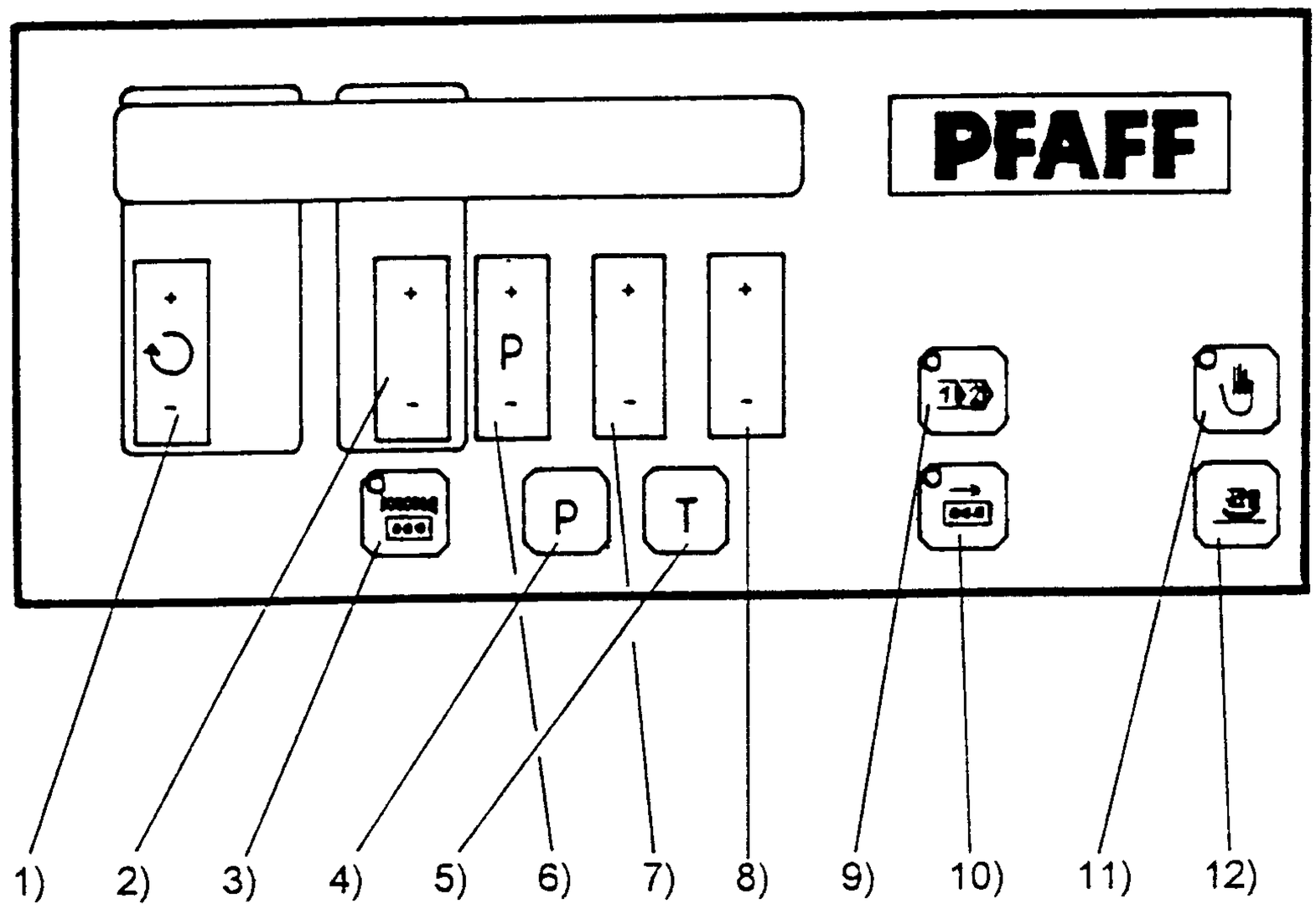

Fig. 5

1) sewing speed	
2)	no function
3)	reset thread error
4)	no function
5)	changing between sewing and programming
6)	changing the parameters (100-group)
7)	changing the parameters (10-group)
8)	changing the parameter
9)	no function
10)	no function
11)	automatik mode or manual mode
12)	inserting flap and table flap down position

8.2 Parameter list

Software Version 2Z_038_1

Parameternr.	Description	Range	Default
169	feed belt stitch length - automatik	0 -255	30
170	feed belt stitch length - manuell	0 - 255	5
181	manuell sewing with belt ("I") or belt and machine ("II")	I / II	II
191	time delay flap up - sewing start	0 - 2550	150
192	max. stitches sewing when LS II covert (set according to pocket size otherwise Error 7)	0-255	70
193	sewing with cuter and stacker ("I") or without ("II")	I / II	I
195	sewing with flap up and down ("I") or with flap up ("II")	I / II	I
196	time delay LS I dark flap up	0 - 2550	300
197	time delay LS I light - sewing stop (overrun)	0 - 2550	500
198	time delay LS I light - cutting end	0 - 2550	30
199	time delay thread sensor filter	0 - 2550	400
605	max. speed in display on ("I") or off ("II")	I / II	II
607	max. speed	100 - 4000	4000
609	position speed	30 - 640	200
718	moment of the finish bracket	0 - 100	0
722	positiv ramp	1 - 50	44
723	negative ramp	1 - 50	14
797	hardwaretest	I / II	II
798	supplier level without red panel	I / II	II
800	turning direction sewing machine	I / II	II
805	turning direction belt drive	I / II	II

Software Version 2Z_038_3 (28.01.98)

Parameternr.	Description	Range	Default
127	max. stitches sewing when LS II covert (set according to pocket size otherwise Error 7)	0-255	70
164	feed belt stitch length - manuell	0 -255	5
165	feed belt stitch length - automatic	0 - 255	55
180	counter in display ("I") or not ("II")	I / II	II
191	time delay flap up - sewing start	0 - 2550	50
194	time delay thread sensor filter	0 - 2550	400
195	time delay sewing machine start - belt feed start	0 - 2550	20
196	time delay LS I dark flap up	0 - 2550	300
197	time delay LS I light - sewing stop (overrun)	0 - 2550	500
198	time delay LS I light - cutting end	0 - 2550	30
316	manuell sewing with belt ("I") or belt and machine ("II")	I / II	II
417	total counter ("I") or daily counter ("II")	I / II	II
465	sewing with cuter and stacker ("I") or without ("II")	I / II	I
466	sewing with flap up and down ("I") or with flap up ("II")	I / II	I
605	max. speed in display on ("I") or off ("II")	I / II	II
607	max. speed	100 - 4000	4000
703	needle position at stop	0 - 239	60
718	moment of the finish bracket	0 - 100	0
722	positiv ramp - out of function	1 - 50	44
723	negative ramp - out of function	1 - 50	14
797	hardwaretest	I / II	II
798	supplier level without red panel	I / II	II
800	turning direction sewing machine	I / II	II
805	turning direction belt drive	I / II	II
809	delay rampe belt drive	0 - 150	130

master Reset: power on + "P+" + "S+" + "L+"
technician level: power on + "P" + "T"
supplier level; technician level parameter 798 on "I" than machine off and on

8.3 Conditioning unit for belt feed

You have to adjust on the conditiong unit fig. 6 the pressure for the belt feed. You should adjust the pressure only so high that the pocket would be feeded thow the attachment and sewing machine without turning.

Do not adjust the pressure higher as 0,4 bar!

We recomend a presure of 0,2 bar.

Fig. 6.

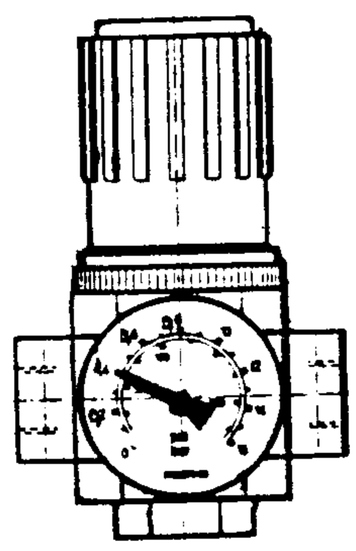

8.4 Error message

Error number	Description	
7	Too much stitches while LS II covered	
8	Thread error	
10	Wrong machine class	
62	Short circuit 24 V	
63	Overload power supplly 24 V motor	
64	Mains monitoring	
65	Extint low at proximity switch	
66	Short circuit	
67	Mains off	
68	Extint low in operation	
69	No increments	
70	Motor blocked	
71	No commutation plug	
72	Commutation plug and synchronizer plug interchanged	
73	Operation of motor disturbed	
75	Blocked control	
90	No EEPROM	
91	EEPROM error	
92	Start inhibitor - motor operation	
110 - 117	Internal flaws	

9 Sewing

9.1 Threading the sewing head

see Operation Manual PEGASUS EX 2242-52P2

Follow safety instructions!

9.2 Sewing Cycle

Manual mode: (LED „manuell" mode is on)

Sewing by means of pedal of the sewing motor.
All functions of the sewing unit (such as knife, cover etc.) are desingaged.

Automatic mode: (LED „manuell" mode is off).

Sensor barrier (Fig. 7) unblocked / blocked:
sewing start, drive starts
Depending on the sewing operation, attachment etc. the workpiece is cut, hemmed, stitched down and stacked.

Sensor barrier (Fig. 7) blocked / unblocked:
sewing stop, drive stops after follow-up movement set at parameter 197.

Fig. 7.

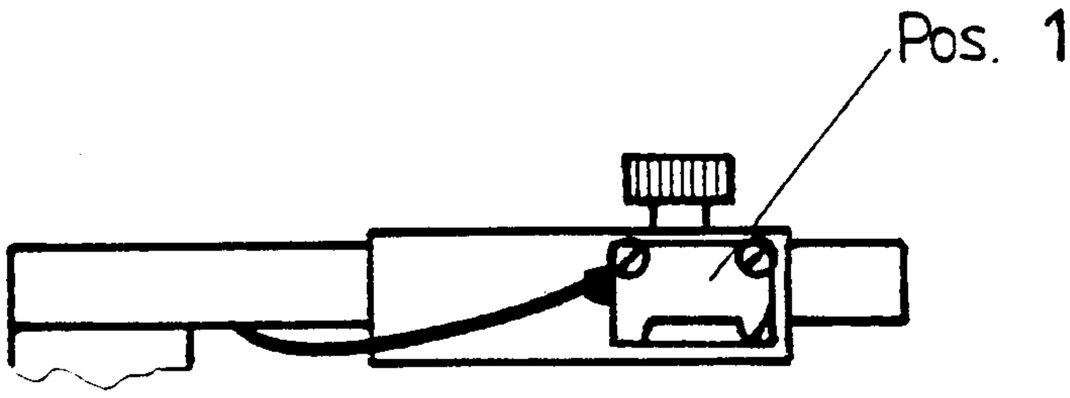

9.3 Feeding system

The speed of the feed bands are preset by a contolled DC-motor programable in combination with the sewing motor (parameter 196). If you wish to change the stitch length you has to change the parameter.

Take care, that if you change the stitch length on the parameter that you change also the stitch length on the sewing machine!

Risk of jamming your fingers at feed bands

10 Care and maintenance

10.1 Air filter / lubricator

- Check air filter / lubricator in regular intervals.

10.2 Water trap

- For max. water level see fig. 8.

- Empty the container (Fig. 8; item **4**) daily
  [drain screw (Fig. 8; item **5**)].

10.3 Air filter

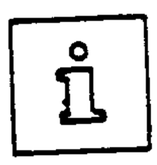

Clean the filter when the operating pressure of 6 bar is no longer obtained.

- Switch off pressure.

- Unscrew container (Fig. 8; item **4**).

- Unscrew washer (Fig. 8; item **6**).

- Take out filter (Fig. 8; item **7**).

- Clean filter and container with gasoline.

- Blow through filter from inside to outside with compressed air.

- Observe O-ring when replacing the parts.

- Switch on compressed air.

10.7 Maintenance

Switch off machine.

- Clean sewing hook and sewing hook area daily or even more frequently when the machine is in continuous use.

- At least once a week the entire machine must be cleaned thoroughly!

- Clean the drive motor once a week

- Lubricate the chain cutter knife before starting to work

Fig.8

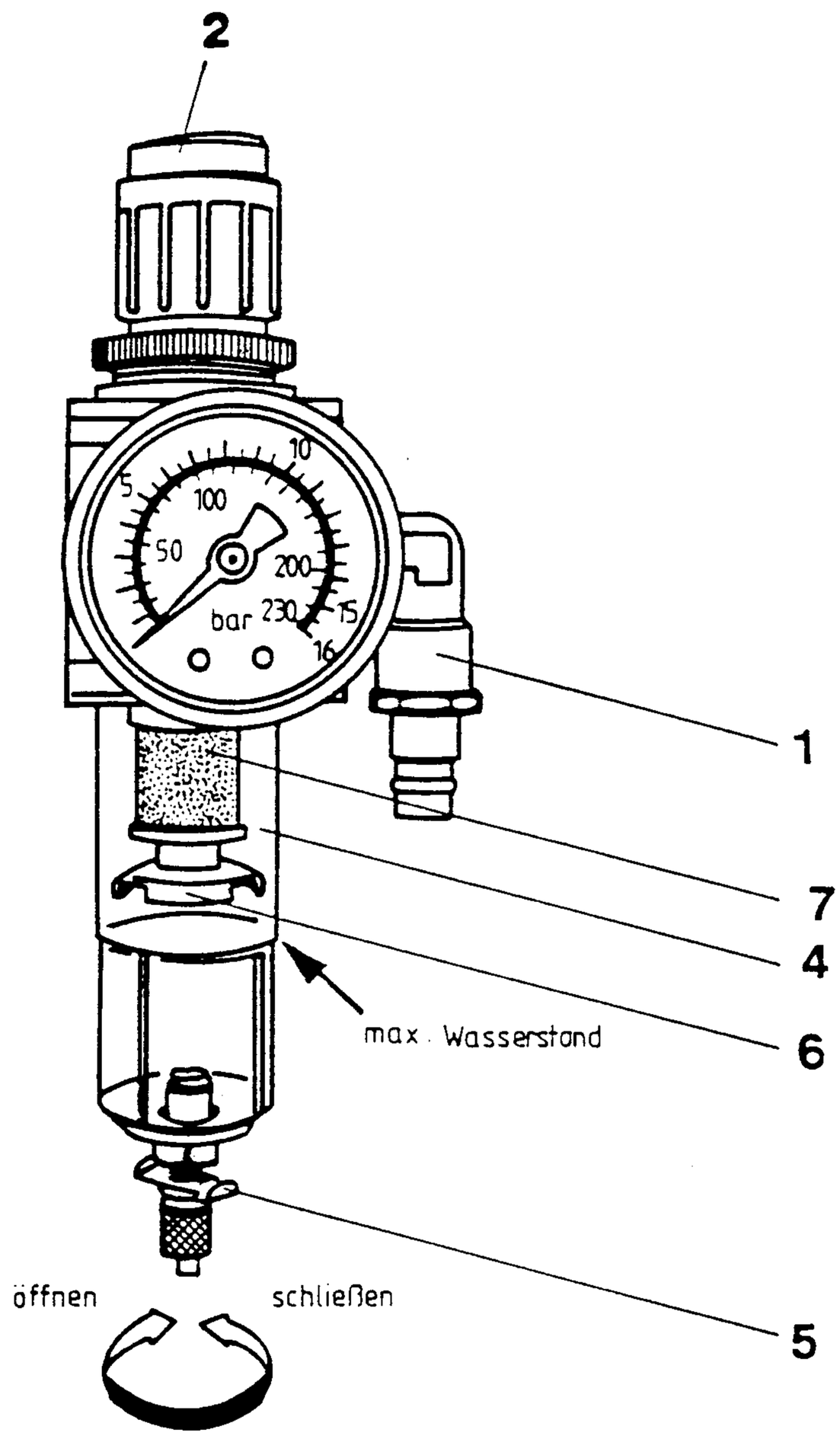
2
1
7
4
6
5
max. Wasserstand
öffnen
schließen
bar
5
10
15
16
50
100
200
230

11 Adjustments

11.1 Sewing machine basic adjustments

Fig. 9

EX 2200 Series

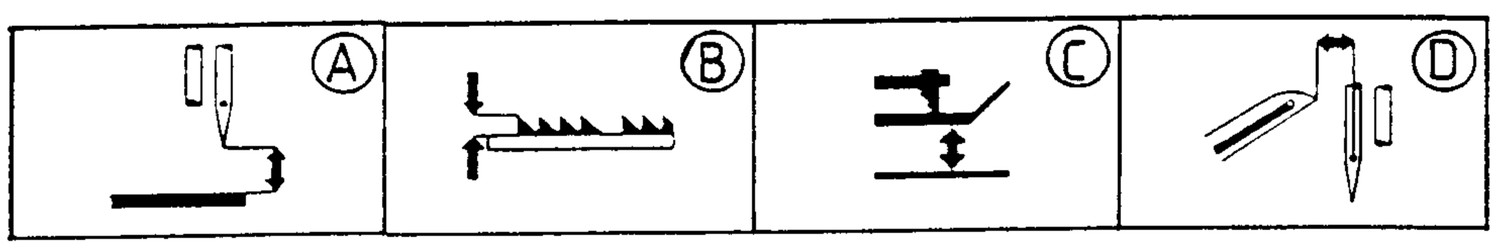

Model	A	B	C	D	
EX 2242 - 52 P2	9,6 ~ 9,8	~ 1,2	5,0	1,8 ~ 1,9	

11.2 Sewing machine stitch length

The stitch length is with the basic adjustments adjustable up to 3.3mm. If the stitch length is required between 3.3 and 4.5mm adjust those on the shaft 15. Fig. 10 by loosing the nut 15.

Please take note that the feed dog didn't touch the needle plate.

Fig. 10

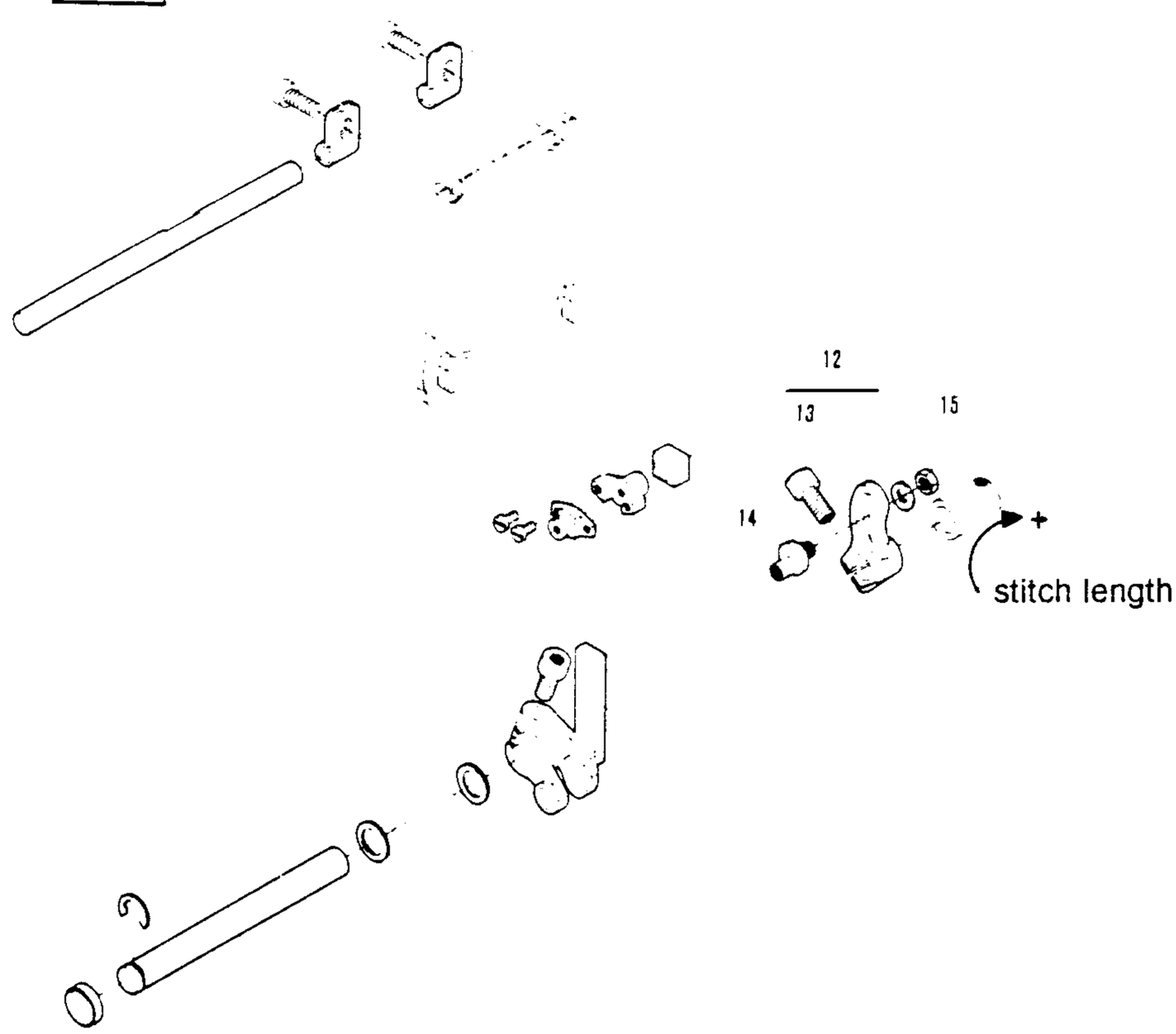

11.3 Feed dog adjustment

Adjust the feed dog that they are as much as possible in the back position without touching the needle plate - if the stitch length is correct adjusted.

Adjustable on pos. 12 Fig. 10 by loosing screw 13.

11.4 Presser foot adjustment

The presser foot must be adjusted as much as possible in the rear to jam the chain on the needle plate but it still must be possible to feed out the fabric. See Fig. 11

Fig. 11

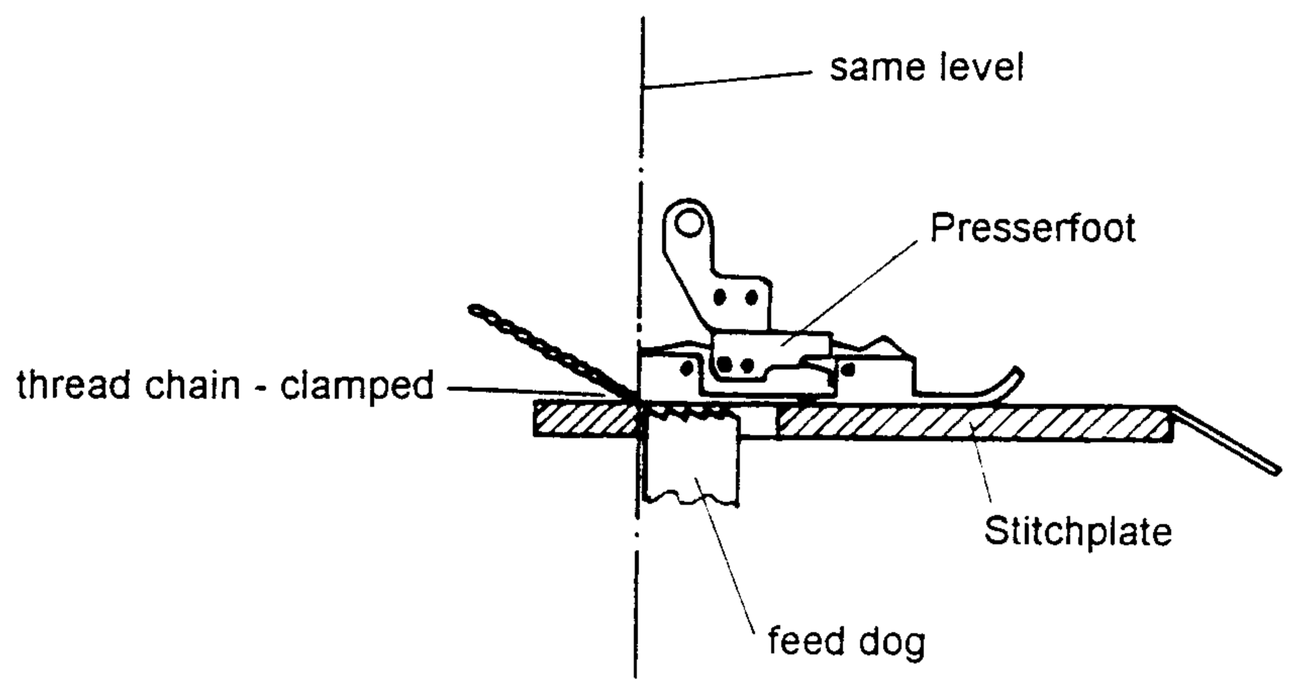

11.5 Needle thread pick up

The pick up should pull 1 to 2mm needle thread in the bottom dead centre when the thread guide is in vertical position.

Adjustable on pos. 3 Fig. 12 by loosing screw 5.

Fig. 12

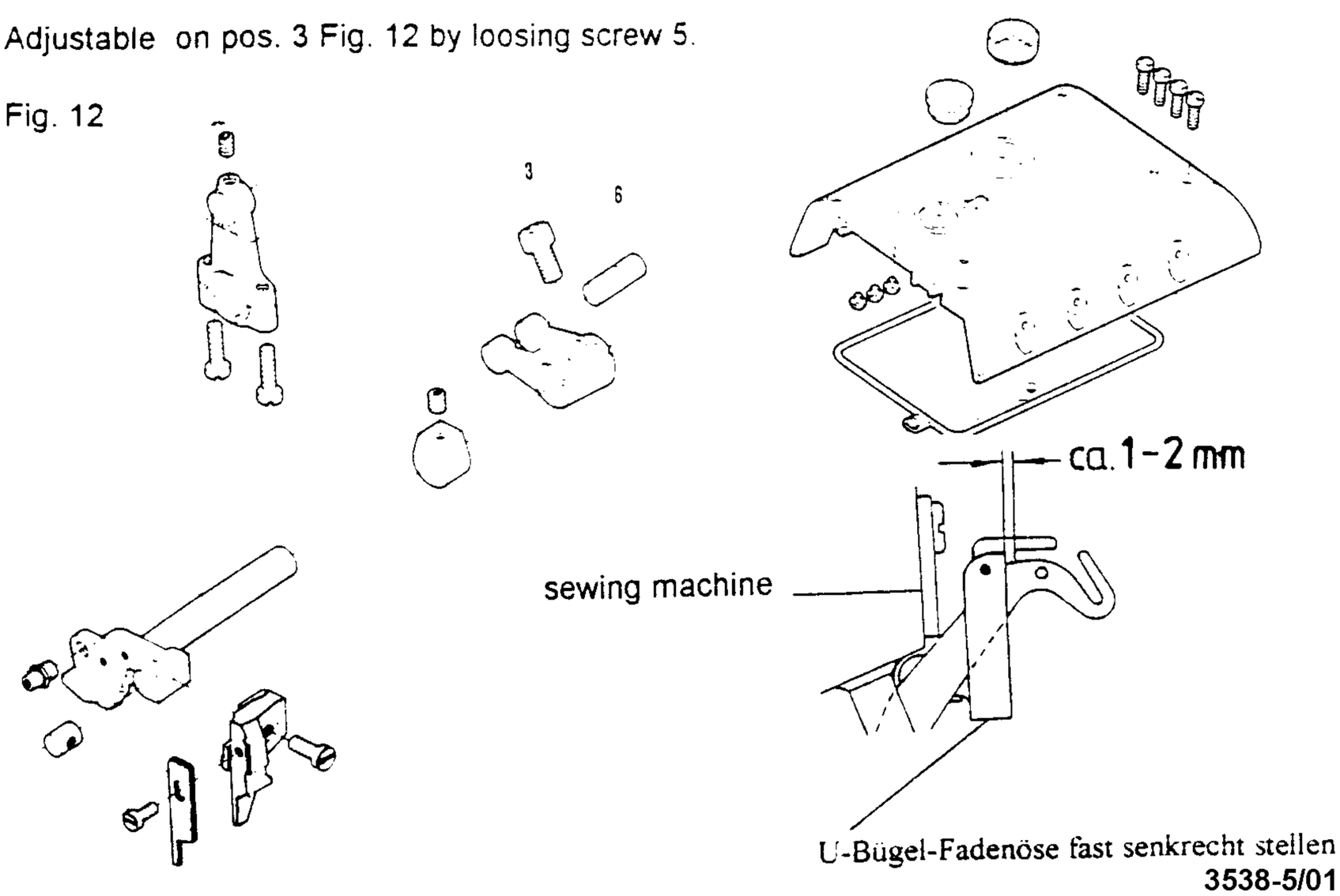

11.6 Looper thread pick up

The looper thread pick up should be adjusted that the pick up begins to pull the thread in the needle top dead centre. See Fig. 13

Fig. 13

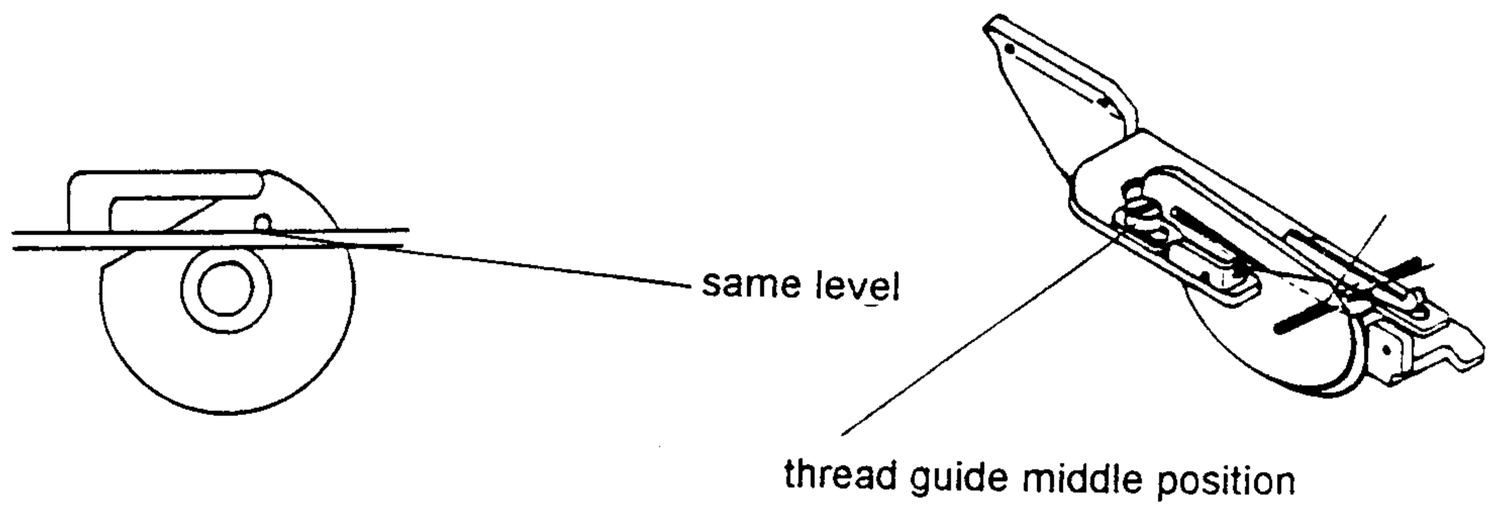

11.7 Attachment adjustment

The attachment should be parallel adjusted to the table plate with the minimum necessary passage for the fabric. The adjustments to the needleplate see in Fig. 14

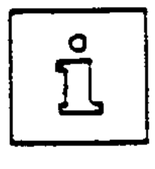

The bottom attachment tongue should be on the same level as the needleplate but it shouldn't touch the angle plate from the needleplate.

Fig. 14

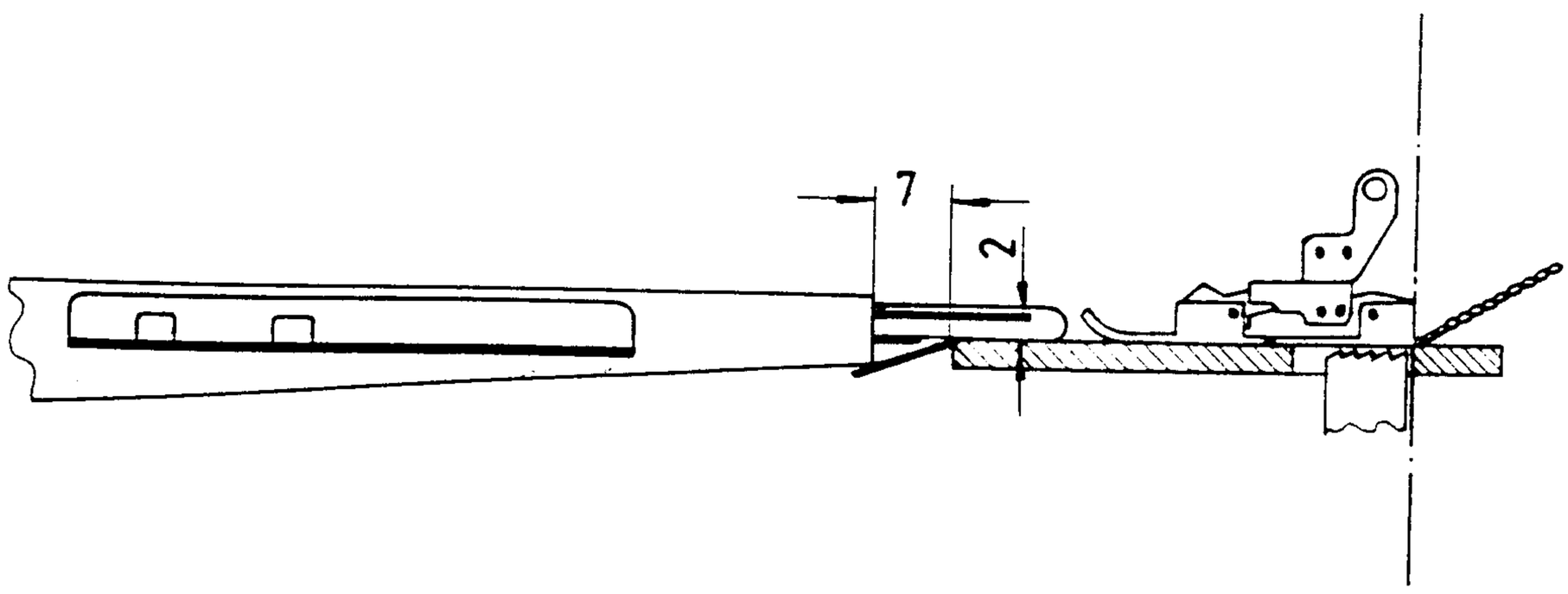

12 Trouble shooting

Pocket goes over presser foot:

possible reason:
- sewing head goes down
- wrong adjustment attachment to presser foot

remedy:
- underlay the sewing head rubber
- attachment adjustment see cap. 11.7.

Chain cutter didn't work properly:

possible reason:
- air pressure not correct (6 bar)
- photocell not correct adjusted (see enclosed leaflet)
- mechanical bind or blunt knives

Thread sensor error without thread breaking:

possible reason:
- thread sensor query to short (parameter 194 or 199)
- thread tension on the sensor not enough

remedy:
- higher tension on the sensor by turning the thread around the thread guide

Error 63 appears:

possible reason:
- belt motor (24 V) gets too hot
- belt motor need too much power

remedy:
- less air pressure on the belt (recommended 0,2 bar)
- cooling the motor (as example with the used air of the vacuum device)

12. Anschlußplan Steckerplatte P117SE

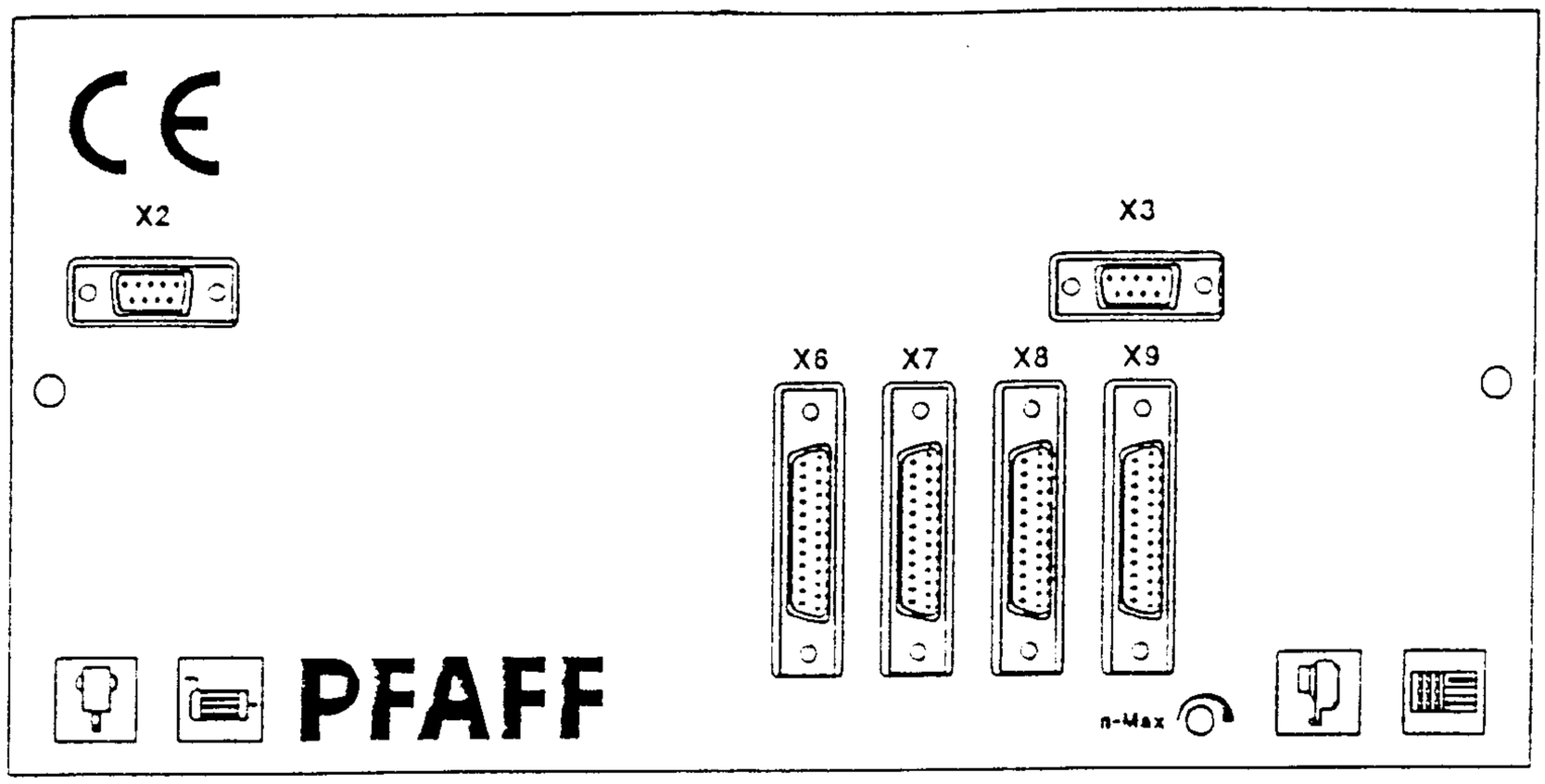

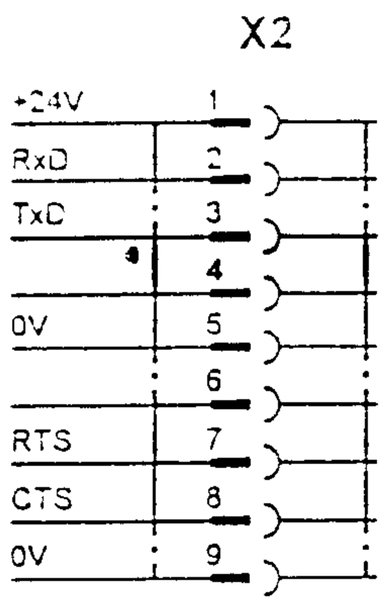

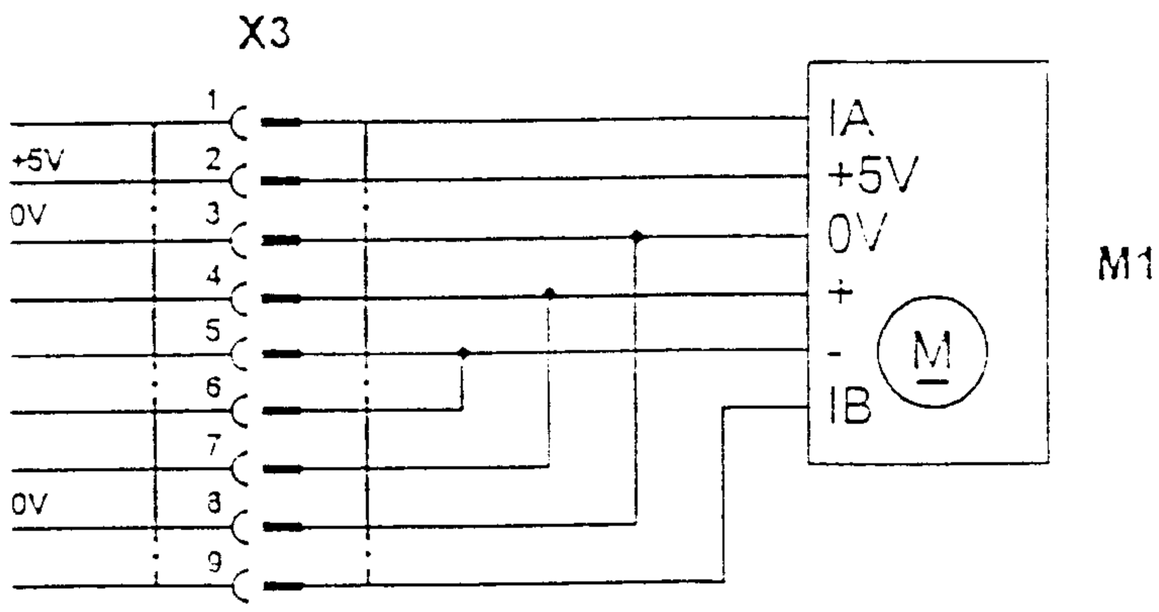

13 Diagrams

13.1 Circuit diagrams

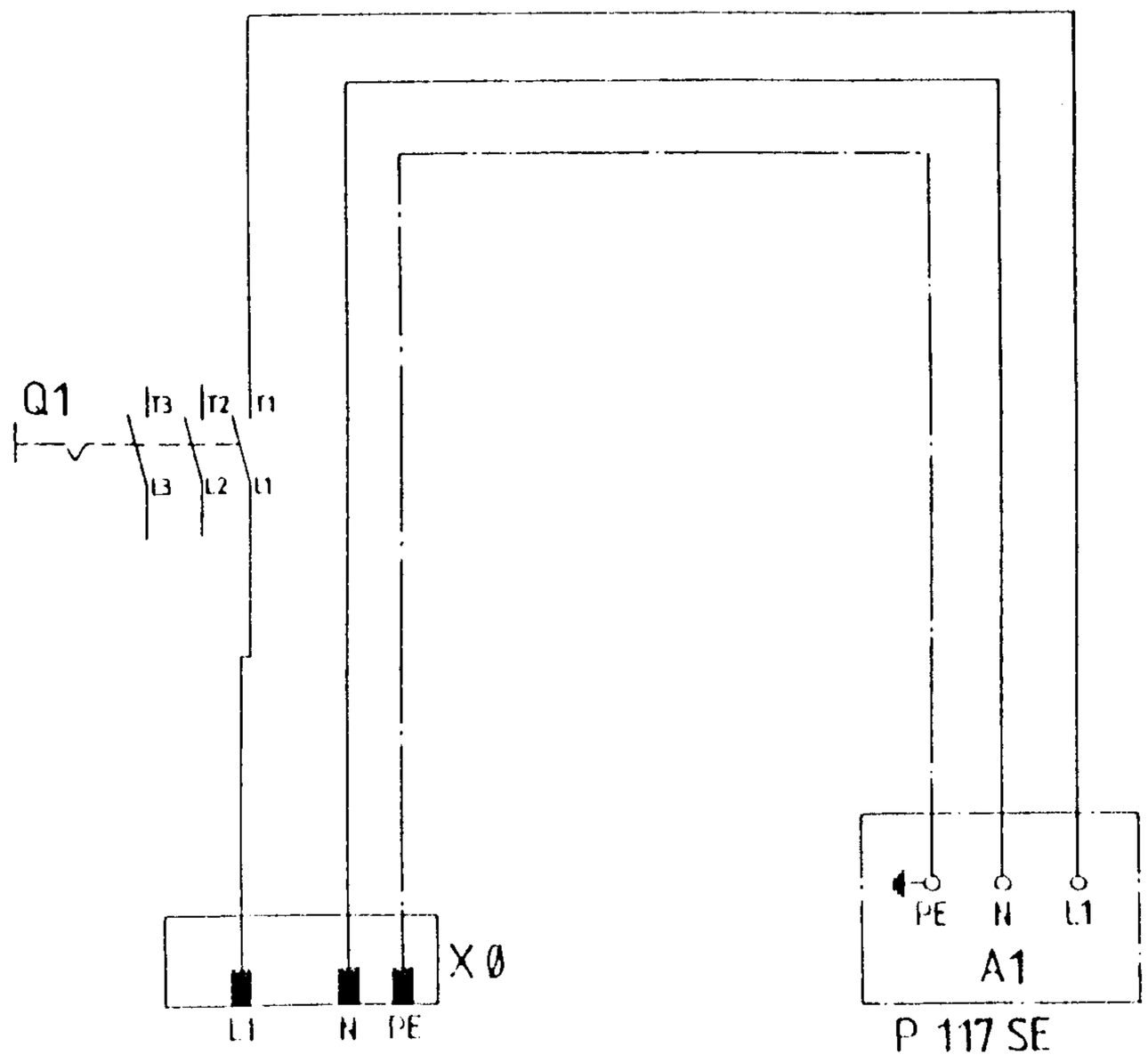

1997	Datum	Name	Benennung Power supply Spannungsversorgung	
[redacted]	11.9.	[redacted]		
[redacted]				
			Typ 3538-5/01	Blatt

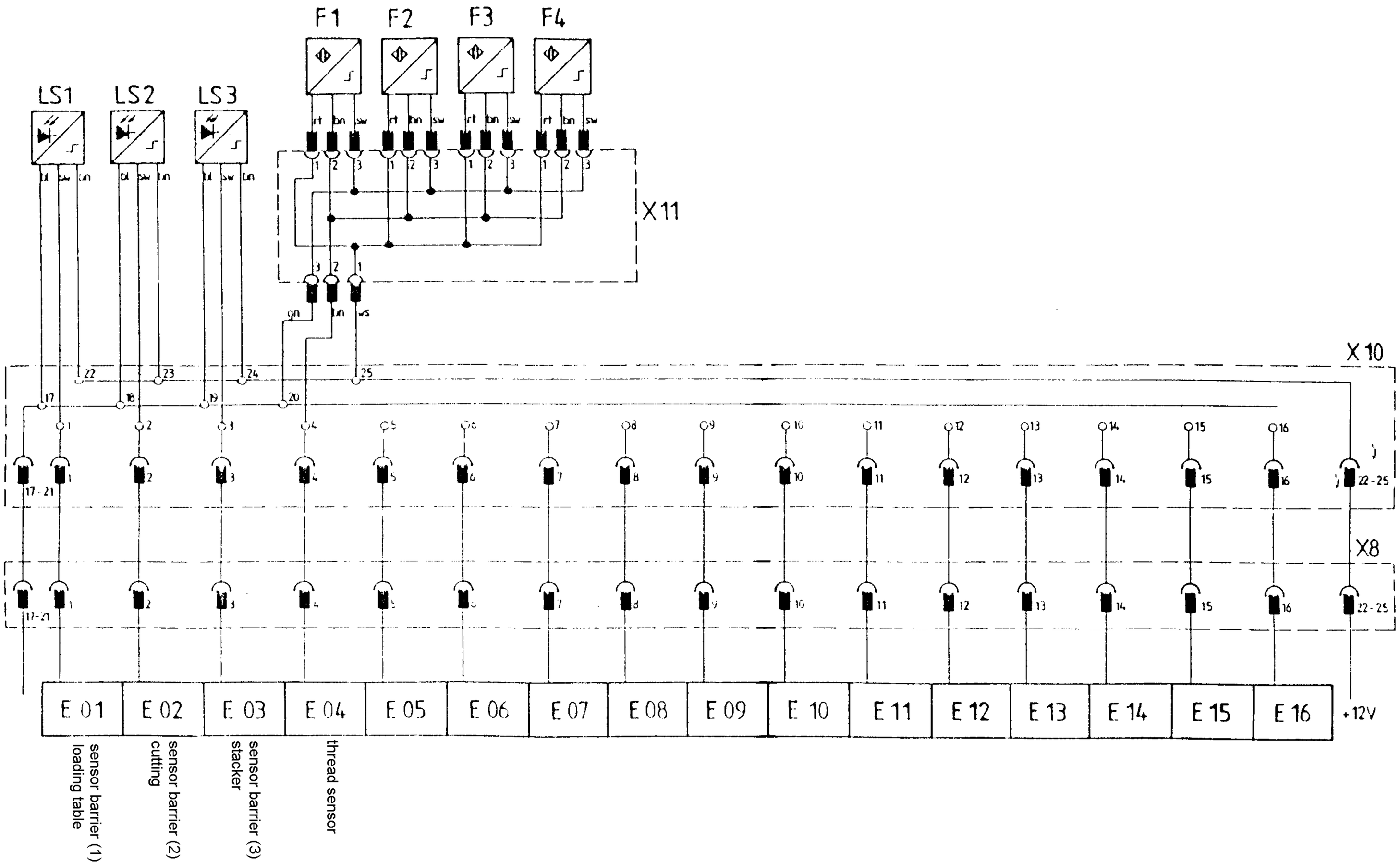

1997	Datum	Name	Benennung	
Gezeichnet	28.5		inputs	
Geprüft				
			Typ 3538 - 5/01	Blatt

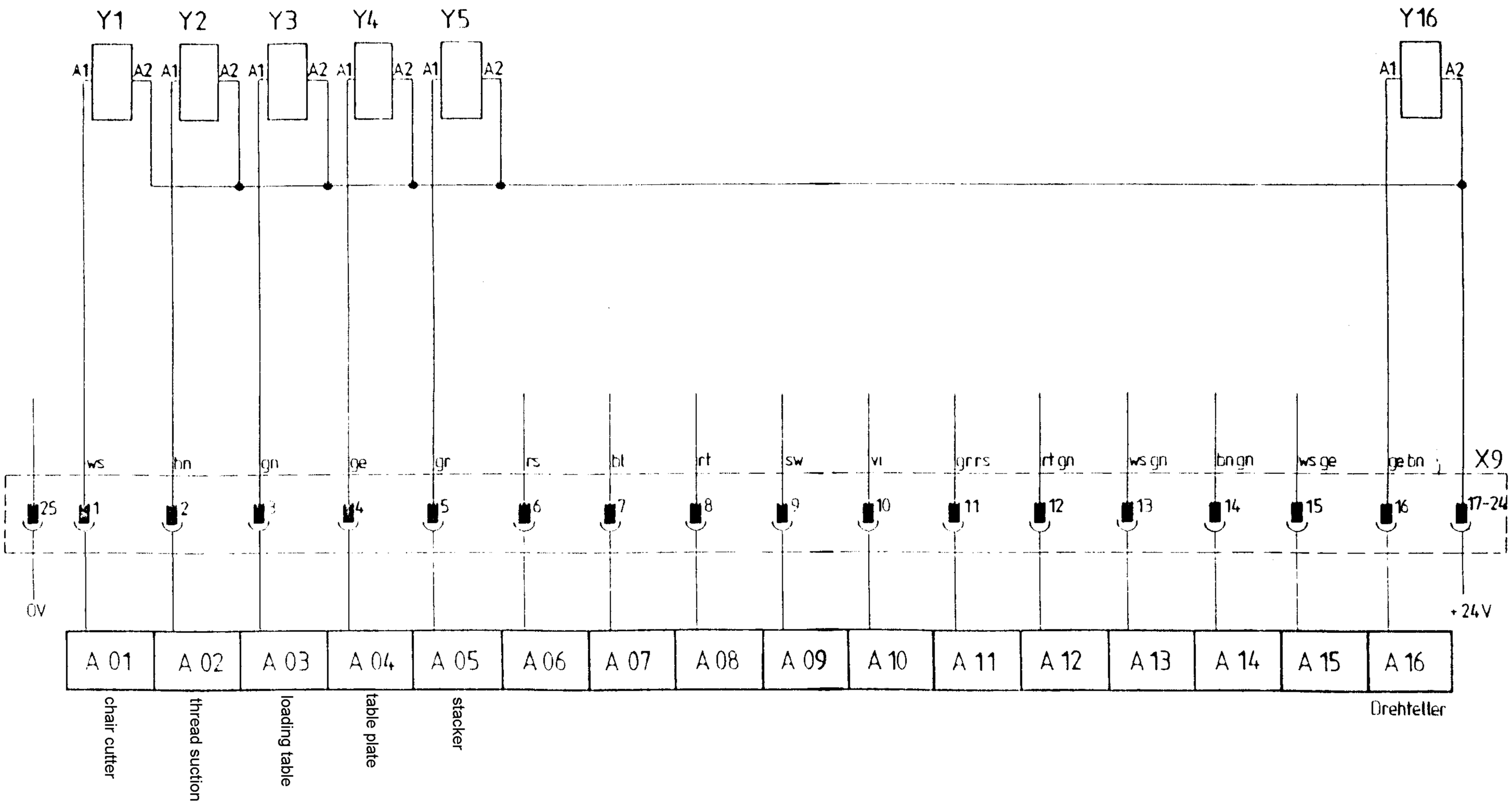

1997	Datum	Name	Benennung	
Gezeichnet	28.5		outputs	
Geprüft				
			Typ KL 3538-5/01	Blatt

13.2 Pneumatic diagram

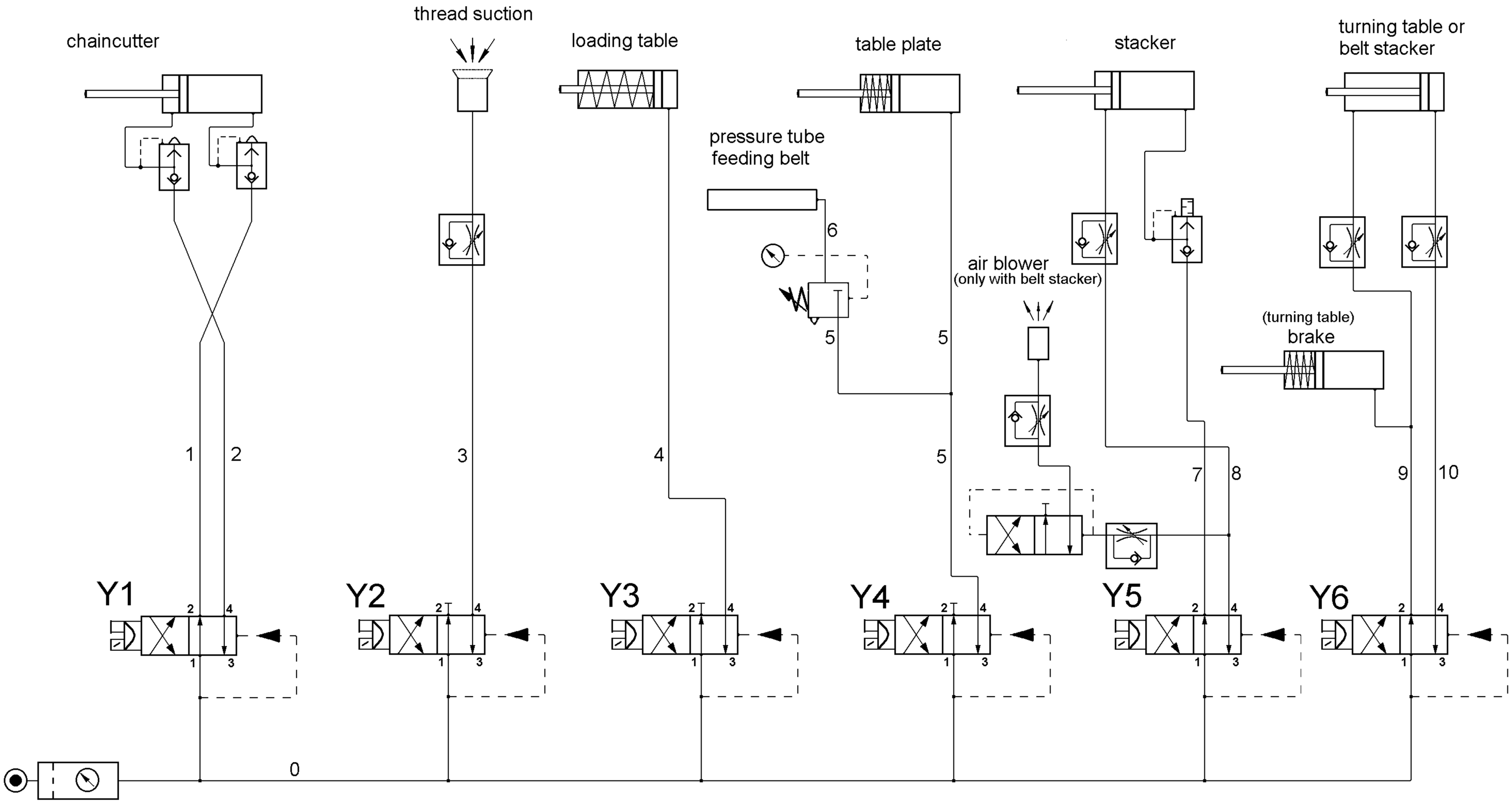

1997	Date:	Name:	Pneumatic Diagram	
	11.9			
			Typ. 3568-5/01	Page

ENGLISH

Photoelectric Reflex Switch
with polarisation filter
Operating Instructions

Safety Specifications

- Read the operating instructions before starting operation.
- Connection, assembly, and settings only by competent technicians.
- Protect the device against moisture and soiling when operating.
- No safety component in accordance with EU machine guidelines.

Proper Use

The WL 150 photoelectric reflex switch is an optoelectronic sensor and is used for detection of optical, non-contanct detection of objects, animals, and people. A reflector is required for operation (included).

Starting Operation

1 H: Light-switching; if light received, output (Q) switches.
D: dark-switching, if light interrupted, output (Q) switches.
Select desired operating mode externally and connect as per connection diagram **B** (L/D=control wire).

2 With following connectors only:
Connect and secure cable receptacle tension-free.
Only for versions with connecting cable:
The following apply for connection in **B**: brn=brown, blu=blue, blk=black, wht=white.
Connect cables.

3 Use mounting holes to mount photoelectric switch to holder (supplied).
Connect photoelectric switch to operating voltage (see type label).
Mount suitable reflector opposite photoelectric switch and align roughly. Adjust for scanning range (see technical data at end of these operating instructions and see diagram; x=scanning range, y=operating reserve, ys=switching threshold).
Adjustment of light reception:
Set switch to max. Determine on/off points of signal strength indicator by swivelling photoelectric switch horizontally and vertically. Select middle position so that red sender beam hits centre of reflector. With optimum light reception, signal strength indicator lights up. If it does not light up, not enough light is being received: readjust and/or clean photoelectric switch and reflector.

4 Object detection check:
Move object into beam; signal strength indicator should go out. If it does not go out, reduce sensitivity using switch until it goes out. It should light up again when object is removed; if it does not light up again, adjust sensitivity until switching threshold is correctly set.

Maintenance

SICK photoelectric switches do not require any maintenance. We recommend that you clean the optical interfaces and check the screw connections and plug-in connections at regular intervals.

WL150-P/-N132

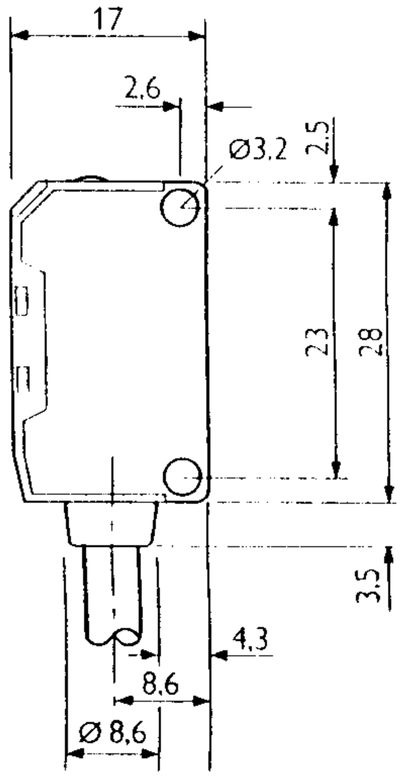

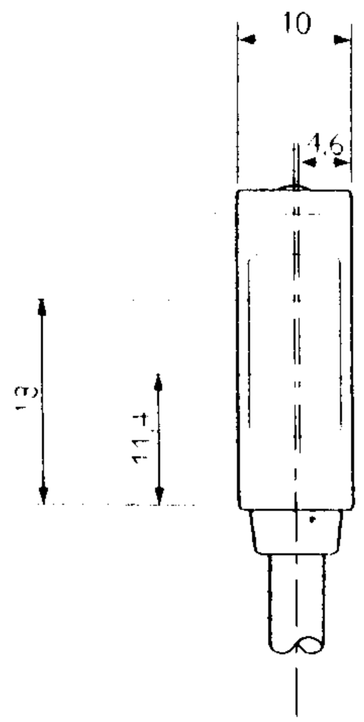

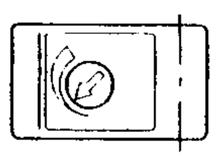

-P/-N430

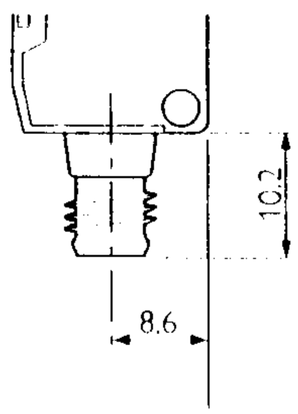

3

WL150
-P/-N132

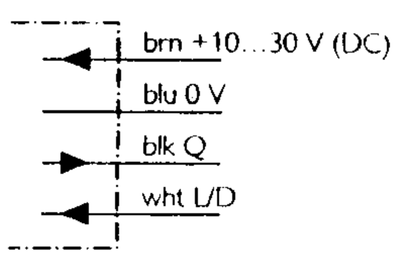

-P/-N430

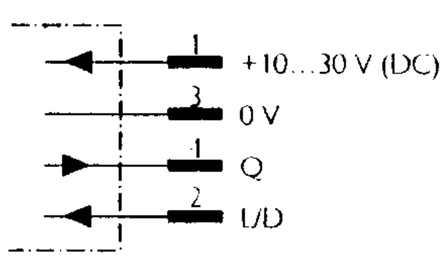

-N -P

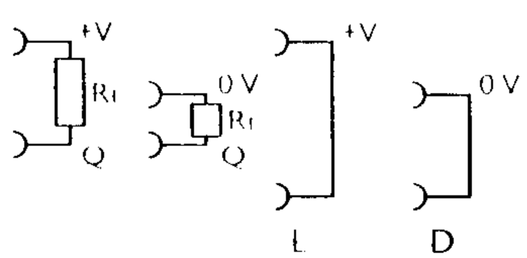

1

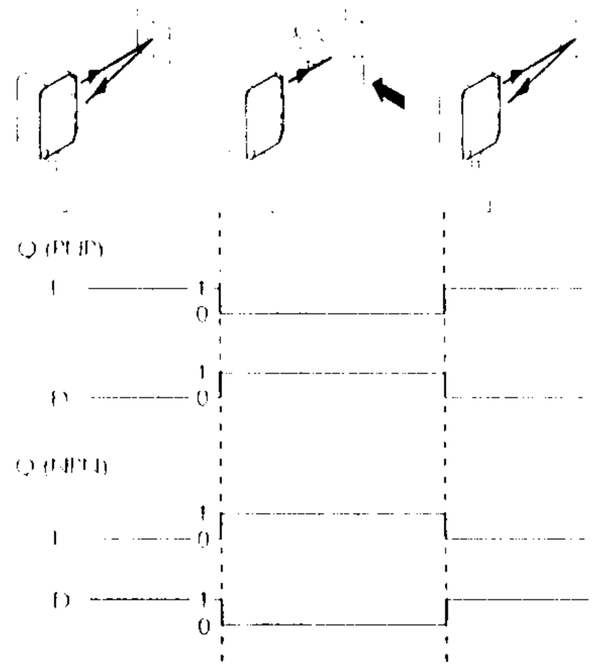

2

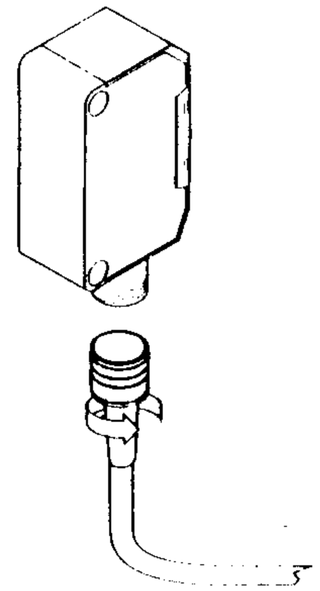

3

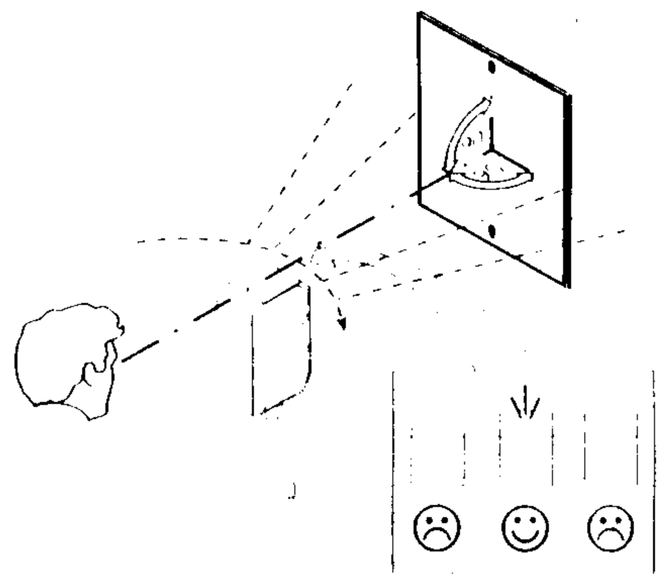

4

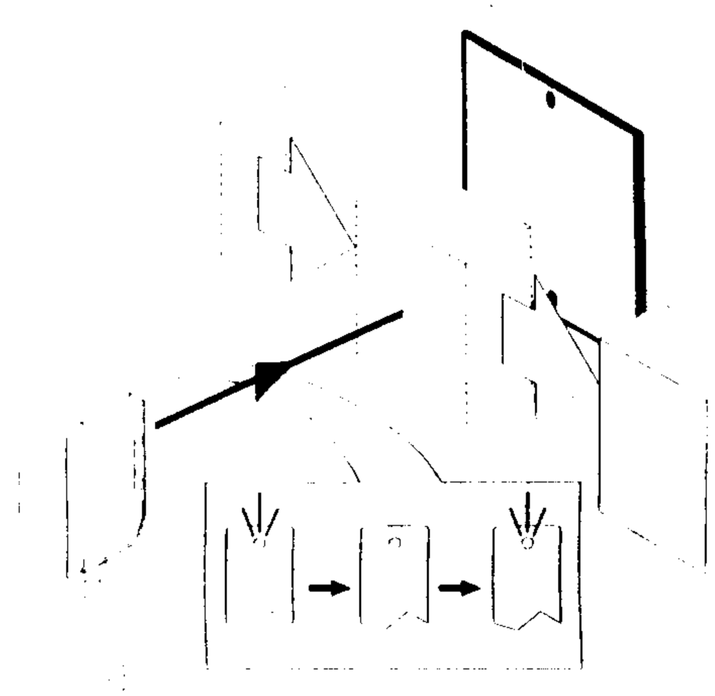

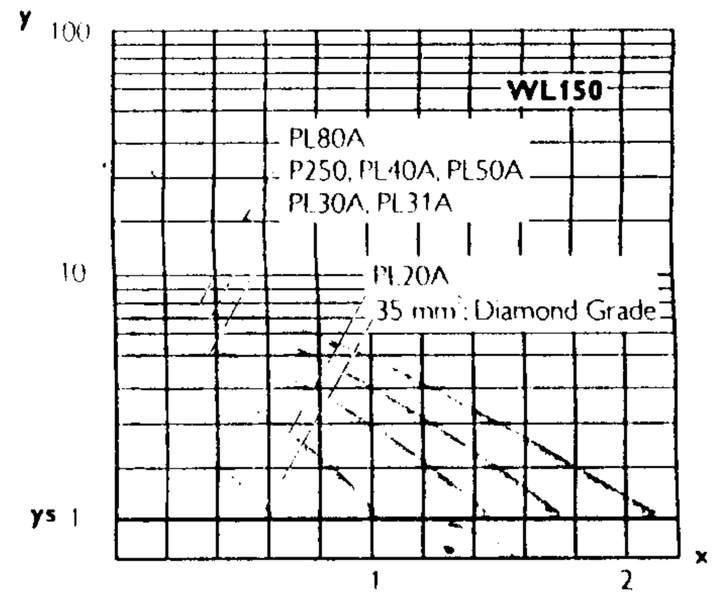

15 Spare parts list

Explanation of codes (?) 3538-5/01

1 secure with Loctite No. 601

2 press, and secure with Loctite No. 601

3 without Reflexfolie Daimond Grande (90X25)

4 without Reflexfolie Daimond Grande (18X10)

5 without Reflexfolie Daimond Grande (56X25)

6 without Teflon coated tape (100X270X0.3)

7 without plug (plug 99-248 057-91 when ordering)

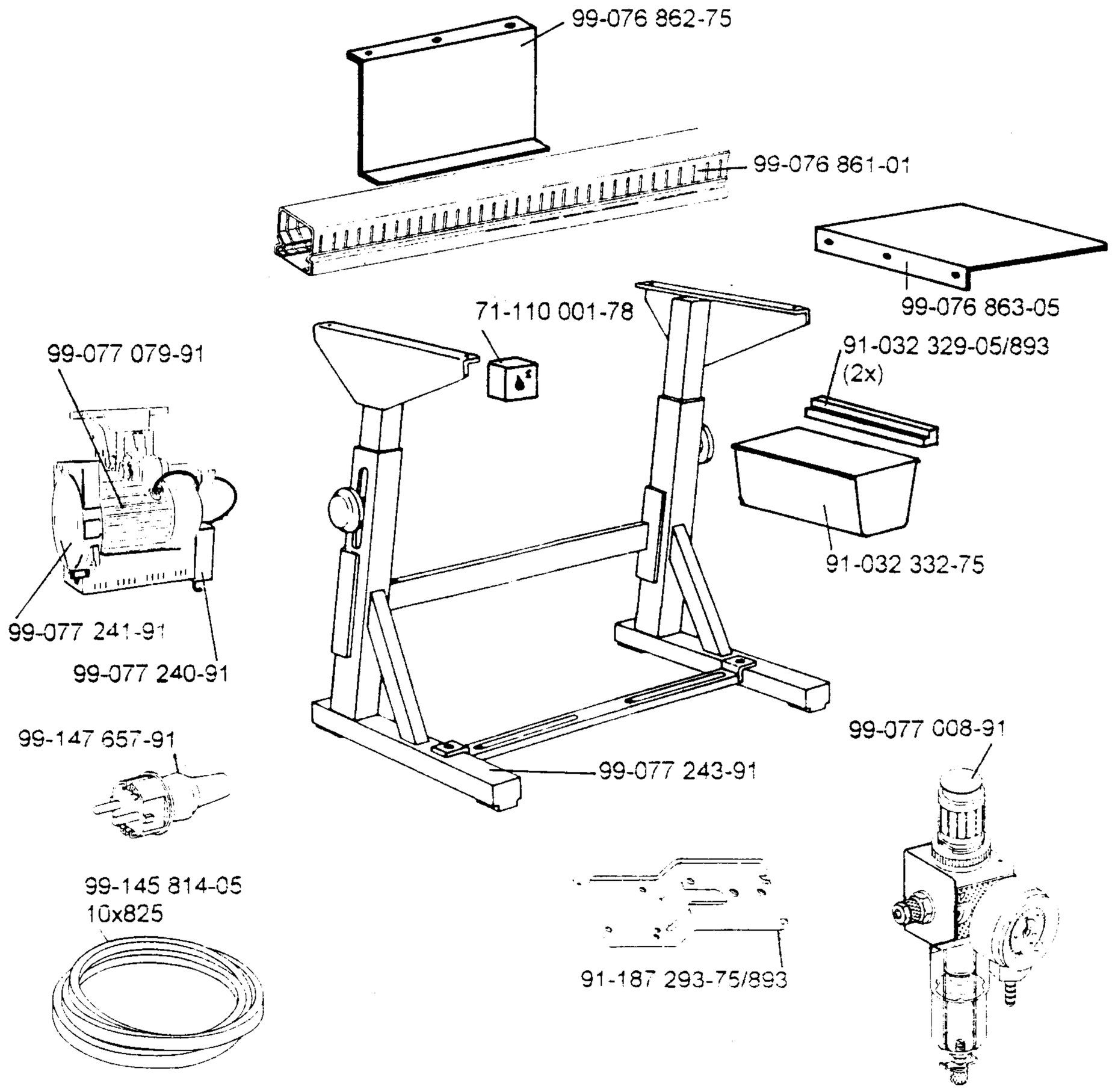
99-076 862-75
99-076 861-01
99-076 863-05
71-110 001-78
91-032 329-05/893
(2x)
99-077 079-91
91-032 332-75
99-077 241-91
99-077 240-91
99-147 657-91
99-077 008-91
99-077 243-91
99-145 814-05
10x825
91-187 293-75/893

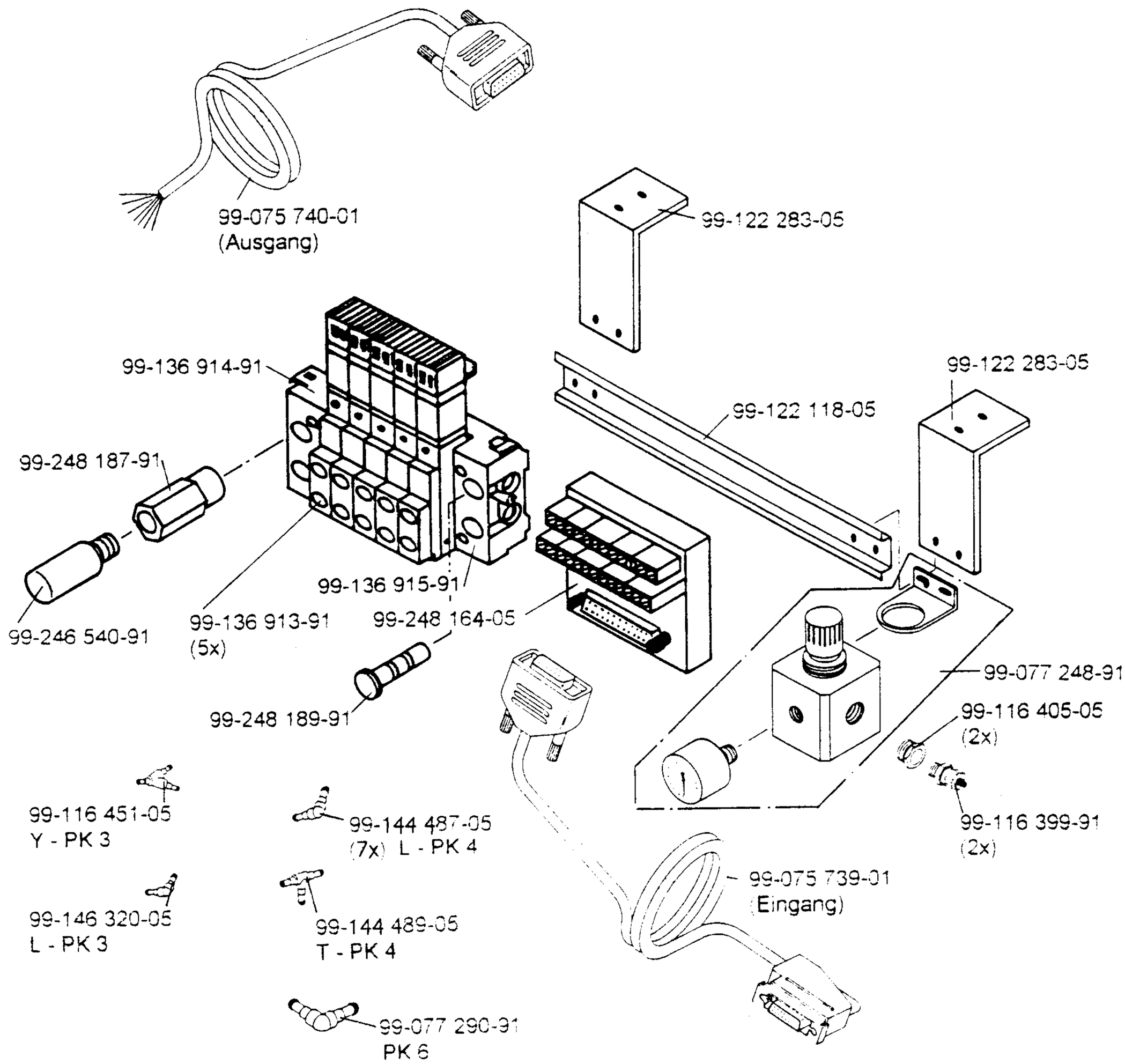
99-075 740-01
(Ausgang)
99-122 283-05
99-136 914-91
99-122 283-05
99-122 118-05
99-248 187-91
99-136 915-91
99-246 540-91
99-136 913-91
(5x)
99-248 164-05
99-077 248-91
99-248 189-91
99-116 405-05
(2x)
99-116 451-05
Y - PK 3
99-144 487-05
(7x) L - PK 4
99-116 399-91
(2x)
99-075 739-01
(Eingang)
99-146 320-05
L - PK 3
99-144 489-05
T - PK 4
99-077 290-91
PK 6

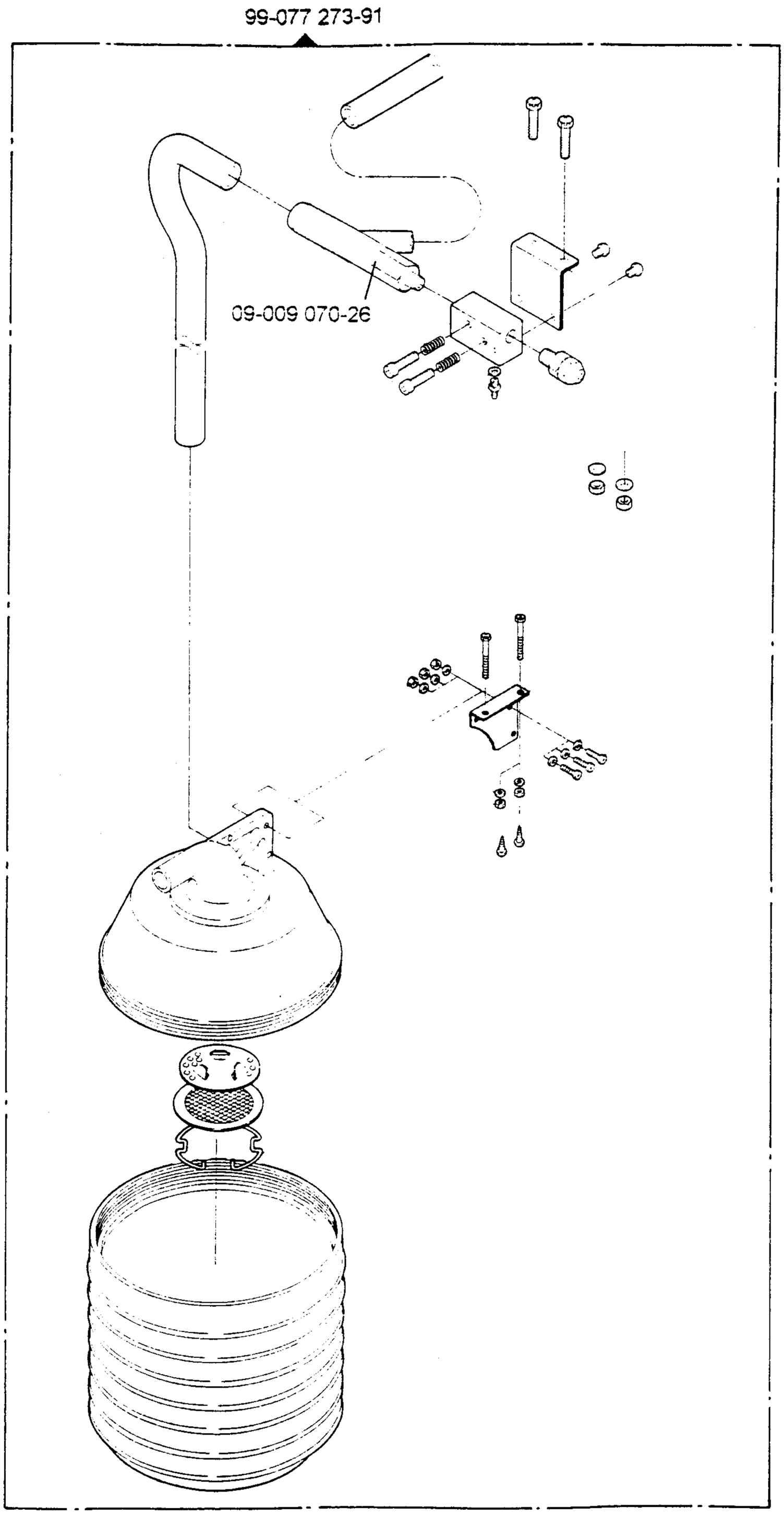
99-077 273-91
09-009 070-26

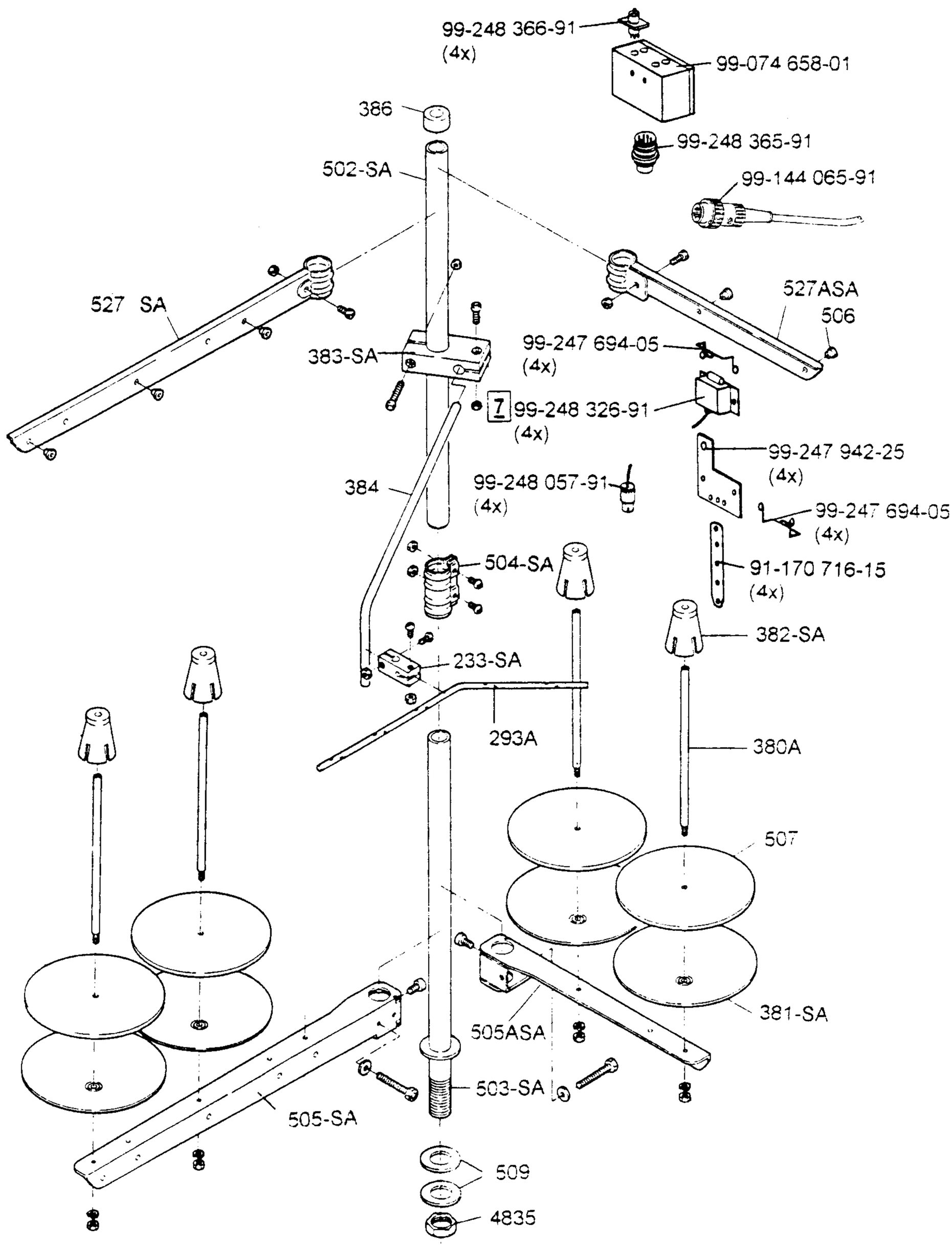
99-248 366-91
(4x)
99-074 658-01
386
99-248 365-91
502-SA
99-144 065-91
527 SA
527ASA
506
383-SA
99-247 694-05
(4x)
7
99-248 326-91
(4x)
99-247 942-25
(4x)
384
99-248 057-91
(4x)
99-247 694-05
(4x)
504-SA
91-170 716-15
(4x)
382-SA
233-SA
293A
380A
507
505ASA
381-SA
503-SA
505-SA
509
4835

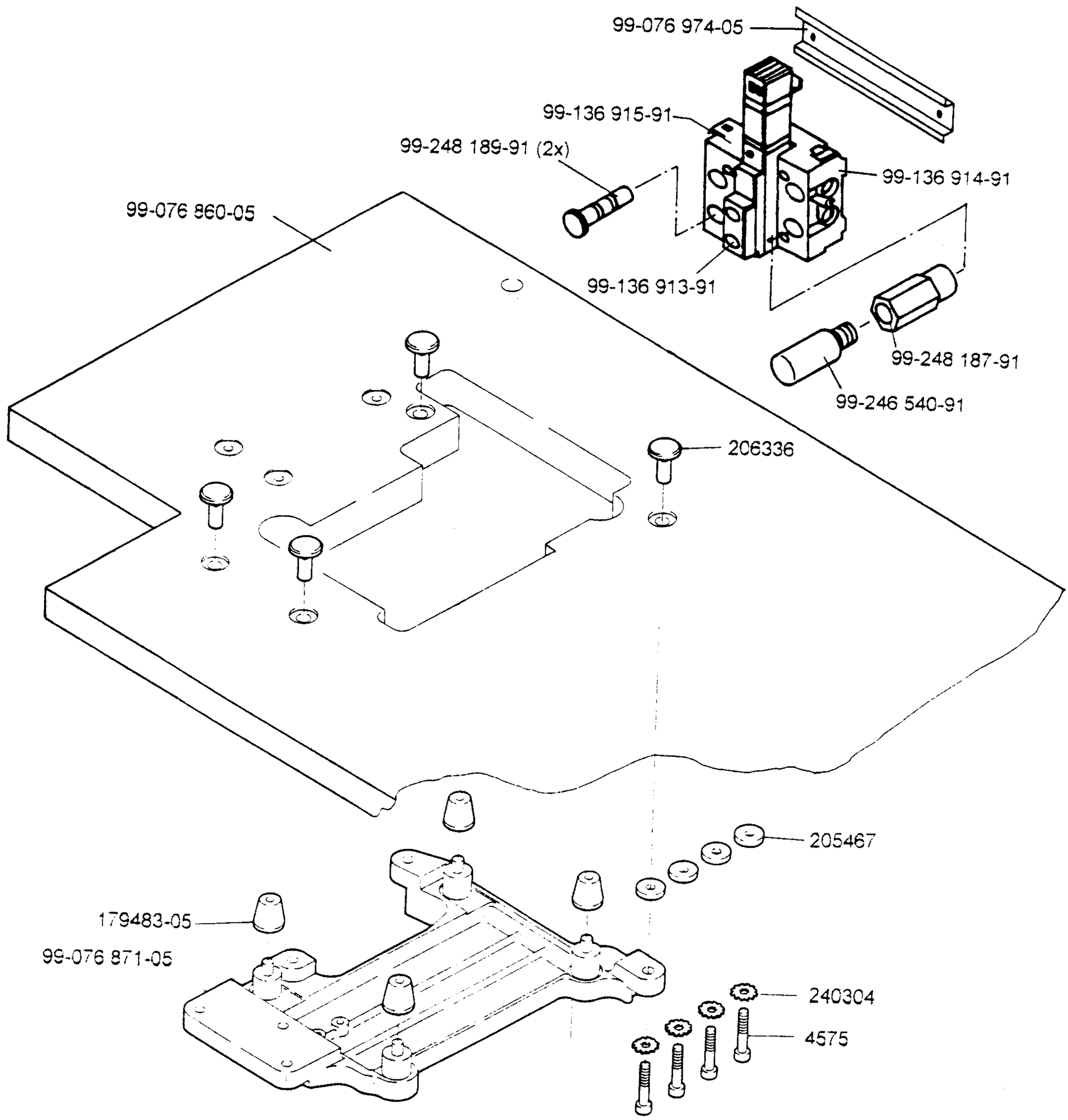
99-076 974-05
99-136 915-91
99-248 189-91 (2x)
99-136 914-91
99-076 860-05
99-136 913-91
99-248 187-91
99-246 540-91
206336
205467
179483-05
99-076 871-05
240304
4575

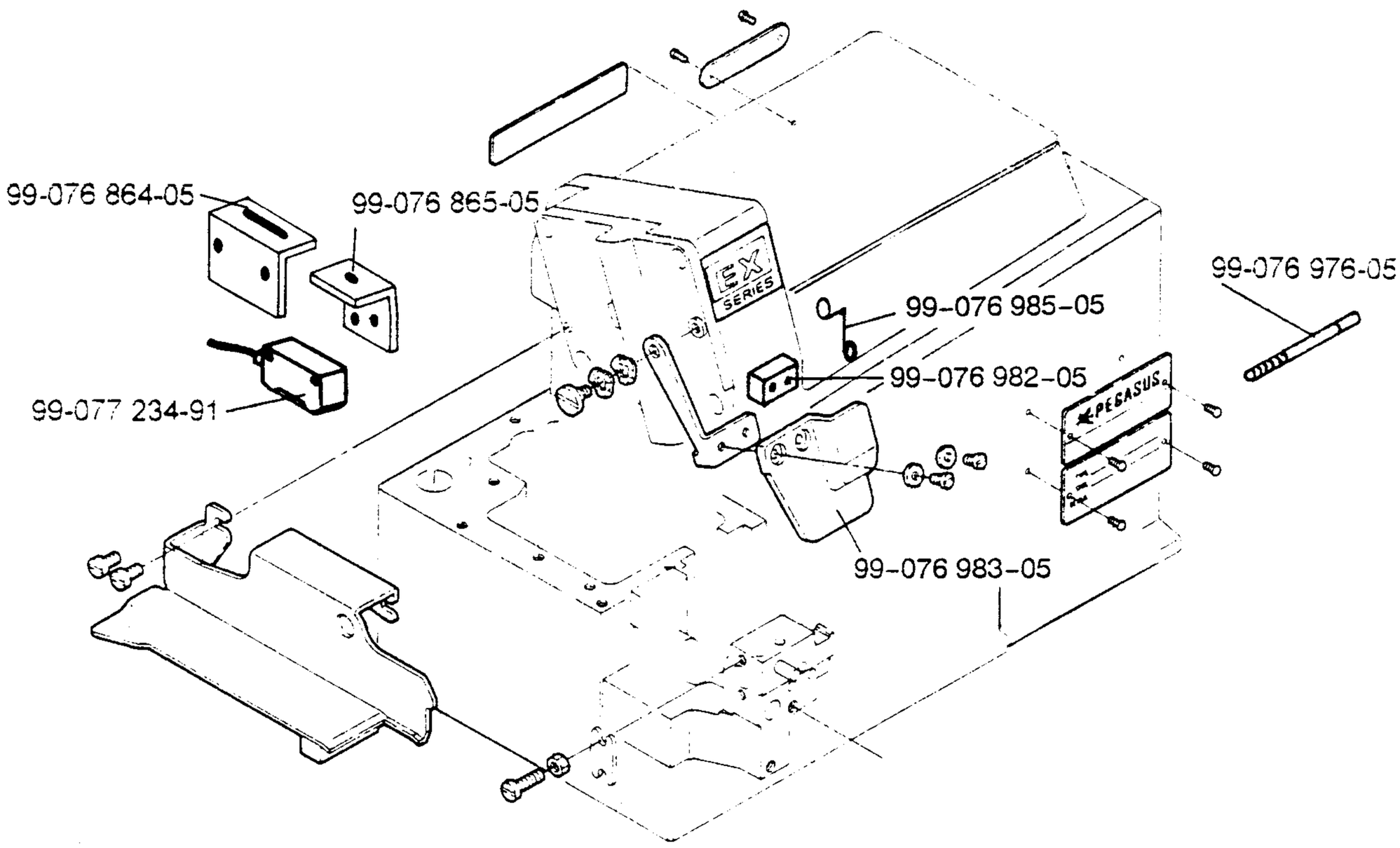
99-076 864-05
99-076 865-05
99-076 976-05
99-076 985-05
99-076 982-05
99-077 234-91
99-076 983-05
EX SERIES
PEGASUS

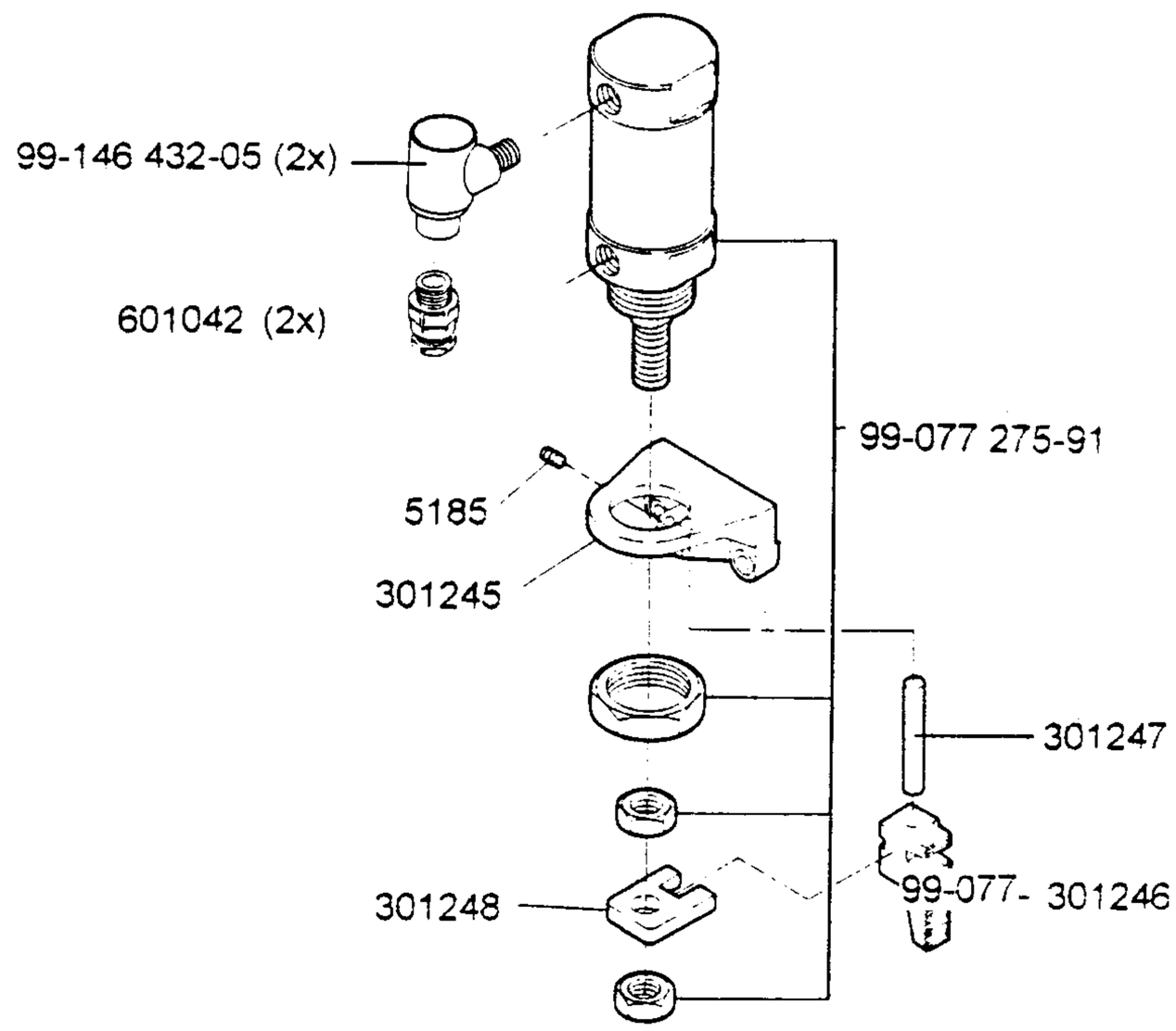
99-146 432-05 (2x)
601042 (2x)
99-077 275-91
5185
301245
301247
301248
99-077- 301246

99-076 991-01

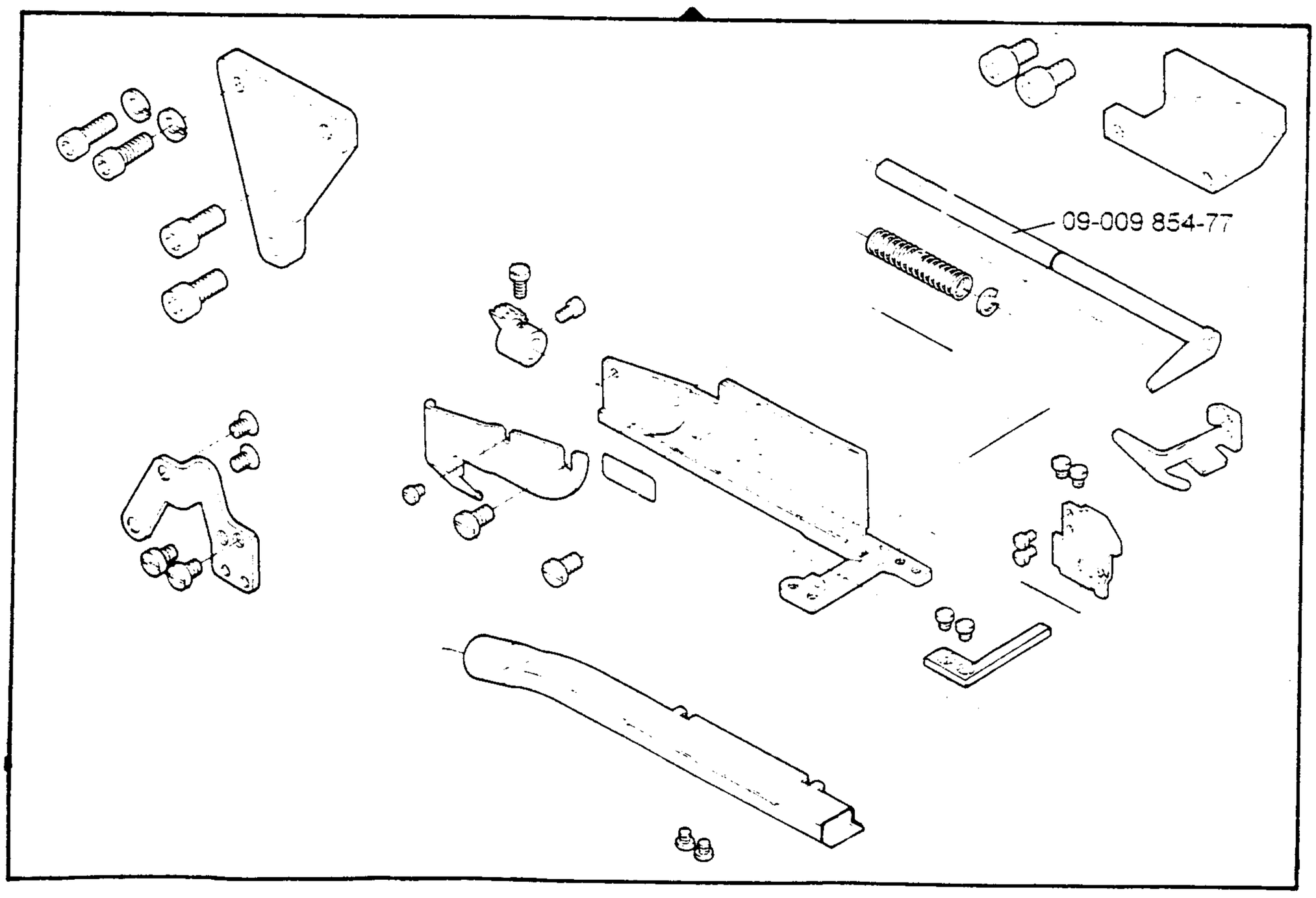
09-009 854-77

NA 6,4

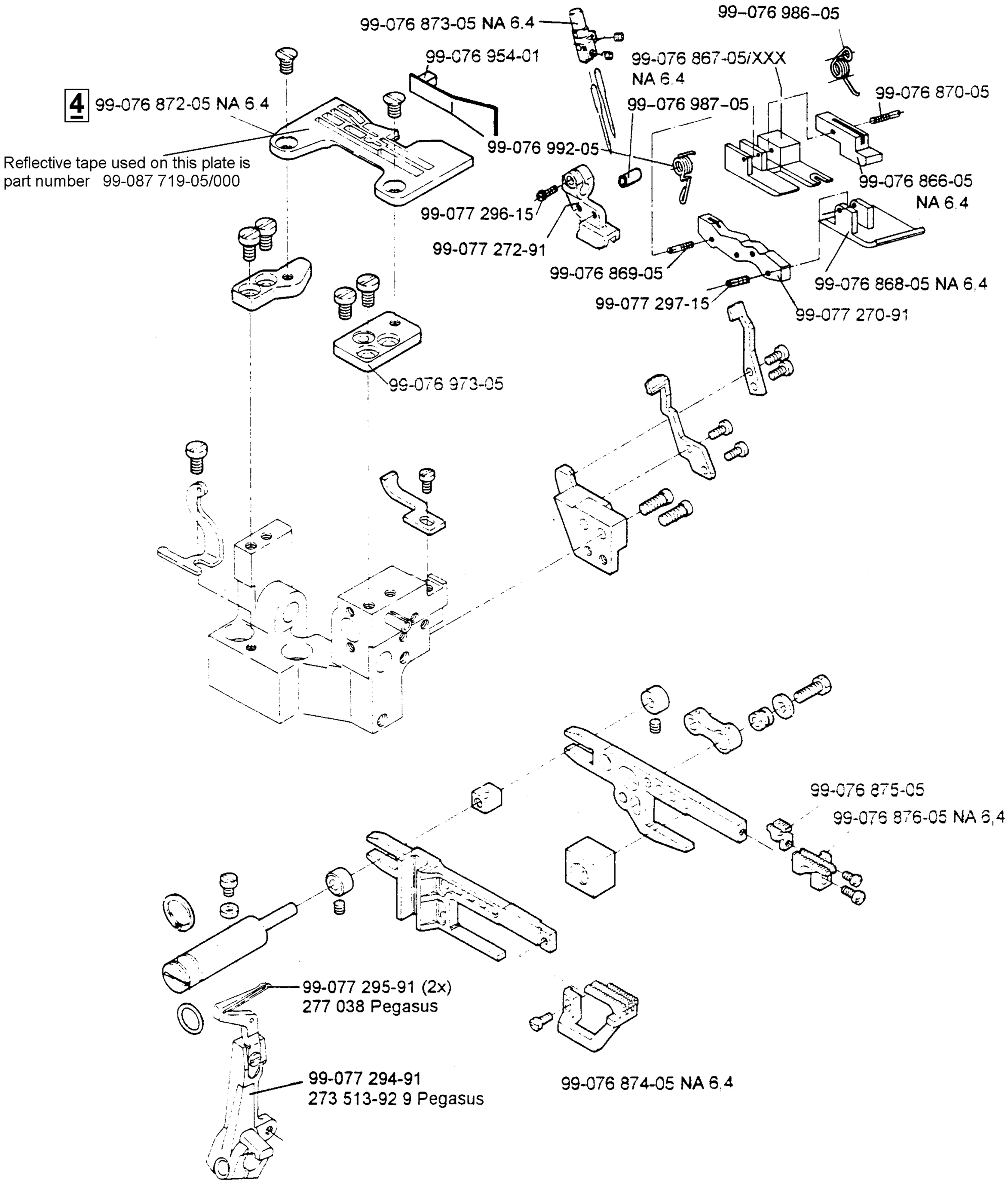
99-076 873-05 NA 6.4
99-076 986-05
99-076 954-01
99-076 867-05/XXX
NA 6.4
4 99-076 872-05 NA 6.4
99-076 987-05
99-076 870-05
99-076 992-05
Reflective tape used on this plate is
part number 99-087 719-05/000
99-076 866-05
NA 6.4
99-077 296-15
99-077 272-91
99-076 869-05
99-076 868-05 NA 6.4
99-077 297-15
99-077 270-91
99-076 973-05
99-076 875-05
99-076 876-05 NA 6,4
99-077 295-91 (2x)
277 038 Pegasus
99-077 294-91
273 513-92 9 Pegasus
99-076 874-05 NA 6.4

NA 7,2

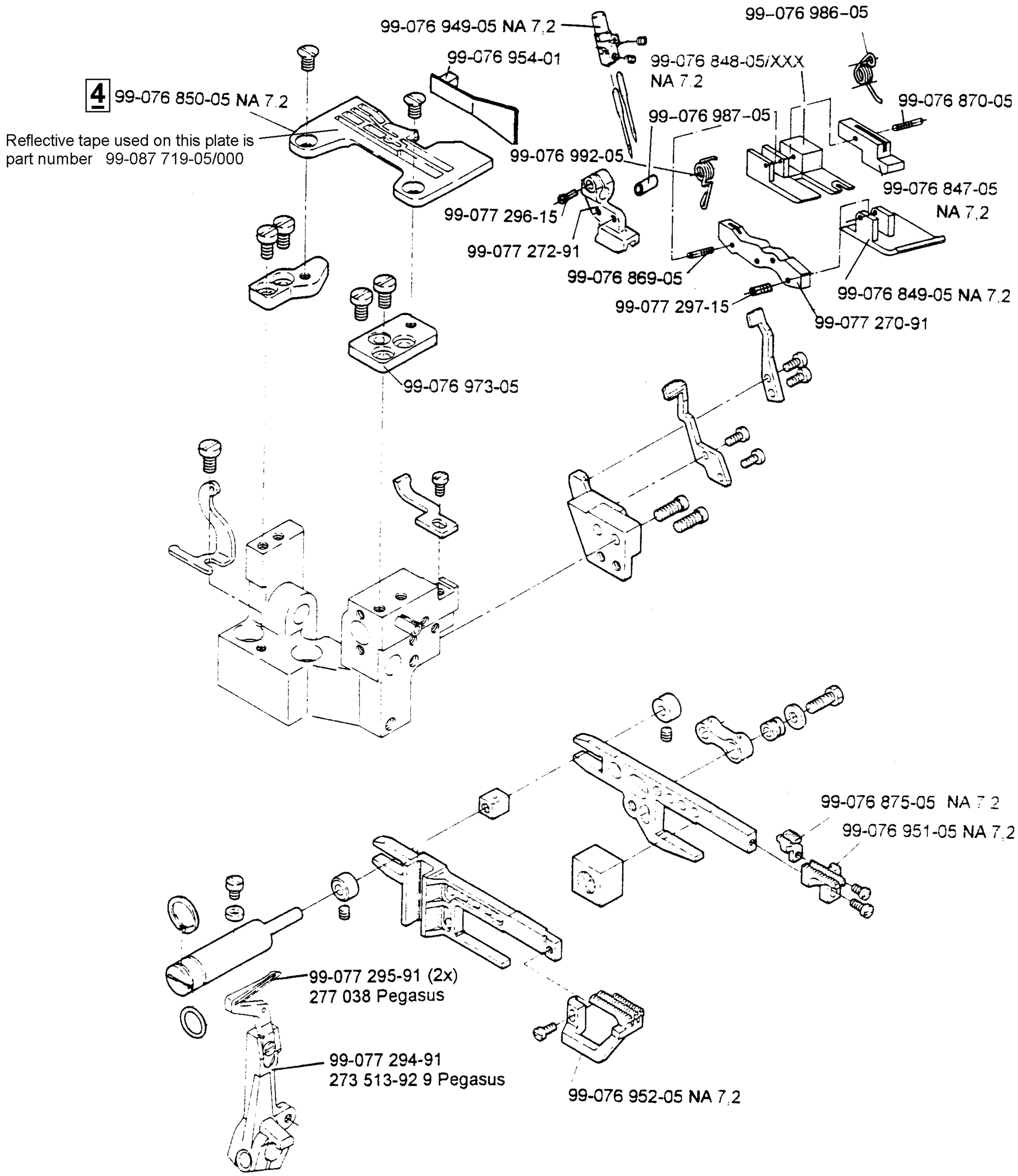
99-076 949-05 NA 7,2
99-076 986-05
99-076 954-01
99-076 848-05/XXX
NA 7,2
4 99-076 850-05 NA 7,2
99-076 870-05
99-076 987-05
Reflective tape used on this plate is
part number 99-087 719-05/000
99-076 992-05
99-076 847-05
NA 7,2
99-077 296-15
99-077 272-91
99-076 869-05
99-076 849-05 NA 7,2
99-077 297-15
99-077 270-91
99-076 973-05
99-076 875-05 NA 7,2
99-076 951-05 NA 7,2
99-077 295-91 (2x)
277 038 Pegasus
99-077 294-91
273 513-92 9 Pegasus
99-076 952-05 NA 7,2

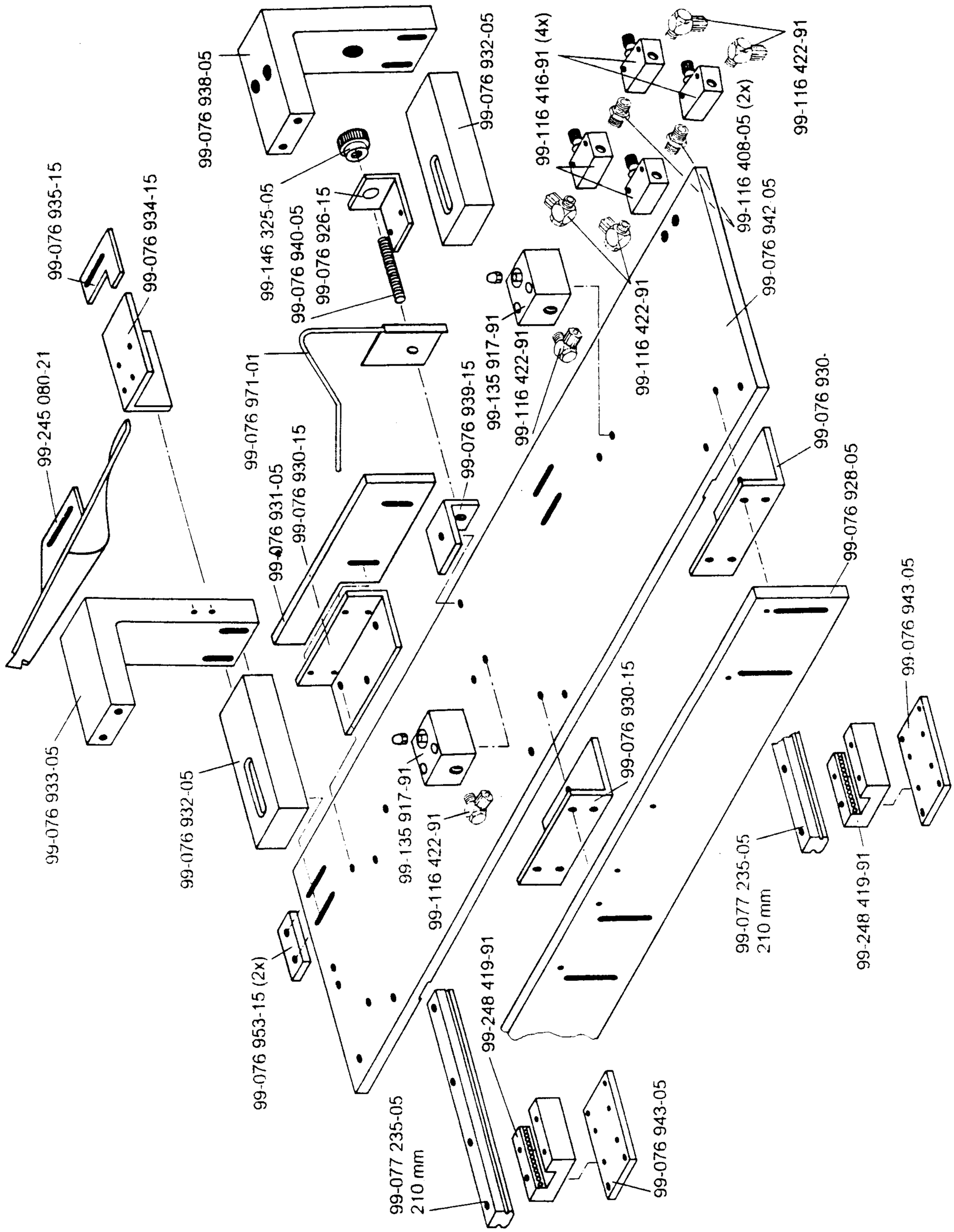
99-076 938-05
99-076 932-05
99-116 416-91 (4x)
99-116 422-91
99-116 408-05 (2x)
99-146 325-05
99-076 940-05
99-076 926-15
99-076 942 05
99-076 935-15
99-076 934-15
99-245 080-21
99-076 971-01
99-076 939-15
99-135 917-91
99-116 422-91
99-116 422-91
99-076 930-
99-076 931-05
99-076 930-15
99-076 928-05
99-076 943 05
99-076 933-05
99-076 932-05
99-135 917-91
99-116 422-91
99-076 930-15
99-077 235-05
210 mm
99-248 419-91
99-076 953-15 (2x)
99-248 419-91
99-077 235-05
210 mm
99-076 943-05

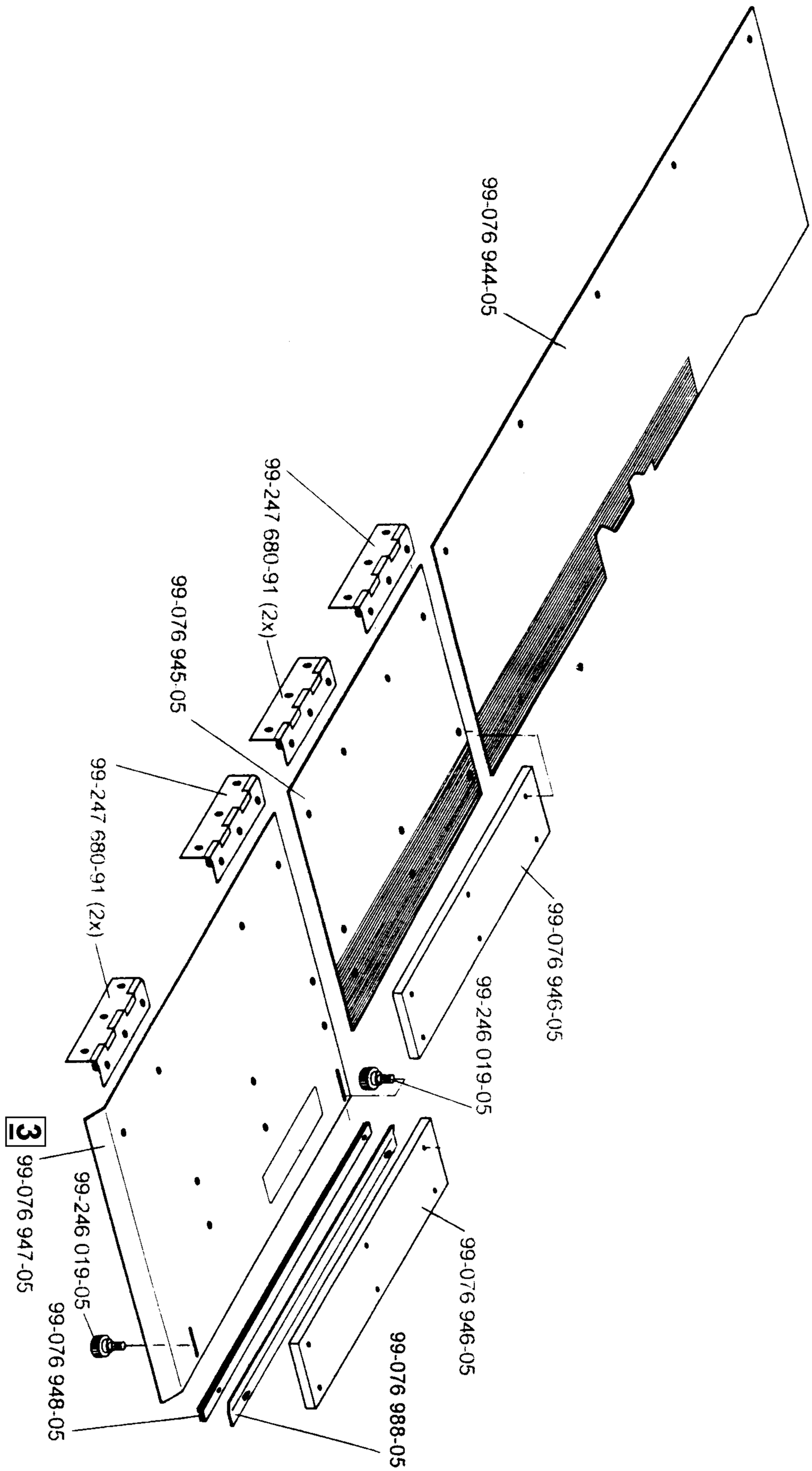
99-076 944-05
99-247 680-91 (2x)
99-076 945-05
99-247 680-91 (2x)
99-076 946-05
99-246 019-05
3
99-076 947-05
99-246 019-05
99-076 948-05
99-076 946-05
99-076 988-05

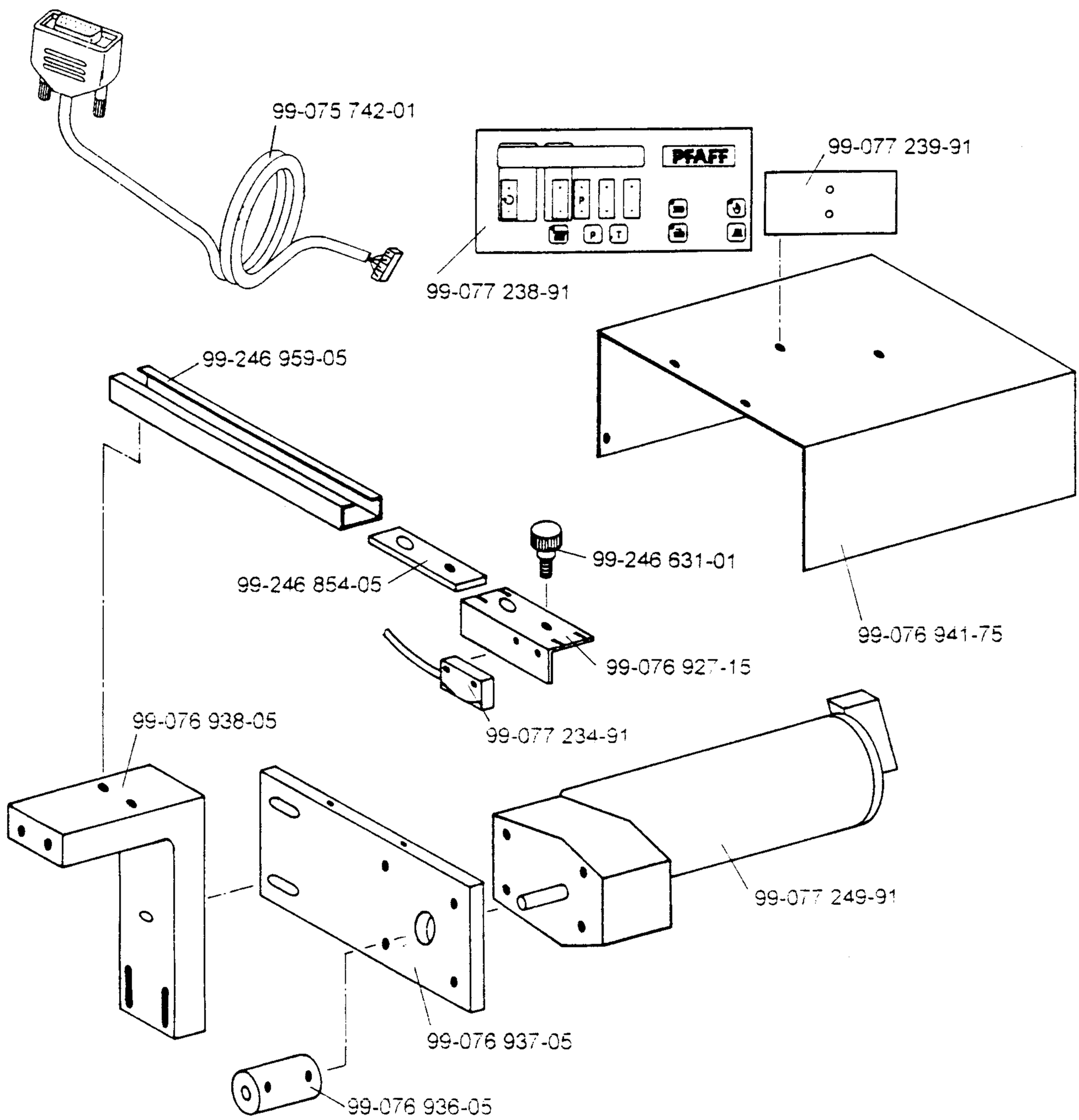
99-075 742-01
PFAFF
99-077 239-91
99-077 238-91
99-246 959-05
99-246 631-01
99-246 854-05
99-076 941-75
99-076 927-15
99-077 234-91
99-076 938-05
99-077 249-91
99-076 937-05
99-076 936-05

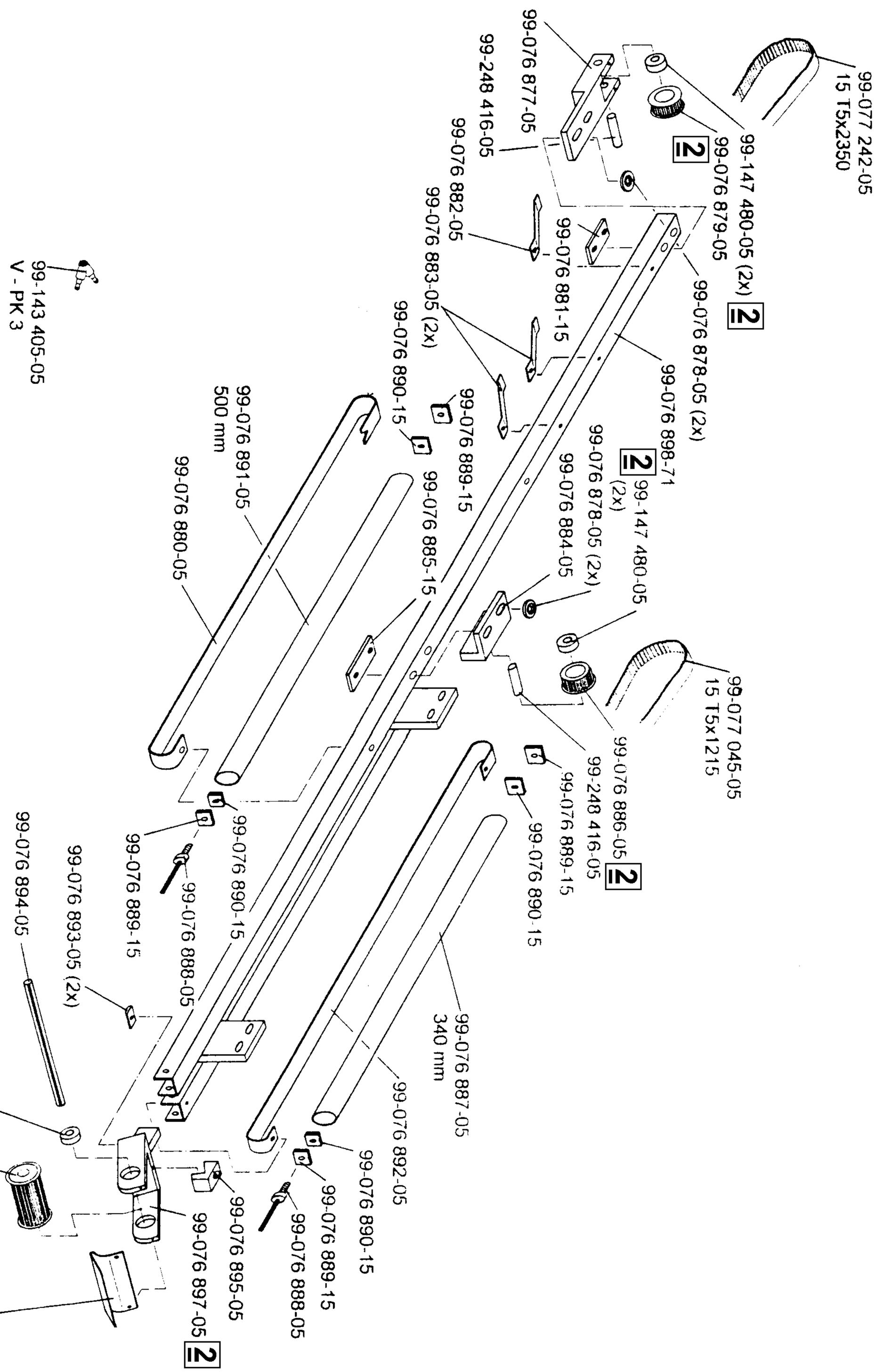
99-077 242-05
15 T5x2350
99-147 480-05 (2x)
99-076 879-05
99-076 878-05 (2x)
99-076 877-05
99-248 416-05
99-076 882-05
99-076 883-05 (2x)
99-076 881-15
99-076 898-71
99-147 480-05 (2x)
99-076 878-05 (2x)
99-076 884-05
99-076 889-15
99-076 885-15
99-076 890-15
99-076 891-05
500 mm
99-076 880-05
99-143 405-05
V - PK 3
99-077 045-05
15 T5x1215
99-076 886-05
99-248 416-05
99-076 889-15
99-076 890-15
99-076 887-05
340 mm
99-076 892-05
99-076 890-15
99-076 889-15
99-076 888-05
99-076 895-05
99-076 897-05
99-076 888-05
99-076 890-15
99-076 889-15
99-076 893-05 (2x)
99-147 480-05 (2x)
99-076 894-05
99-076 896-05
99-076 899-05

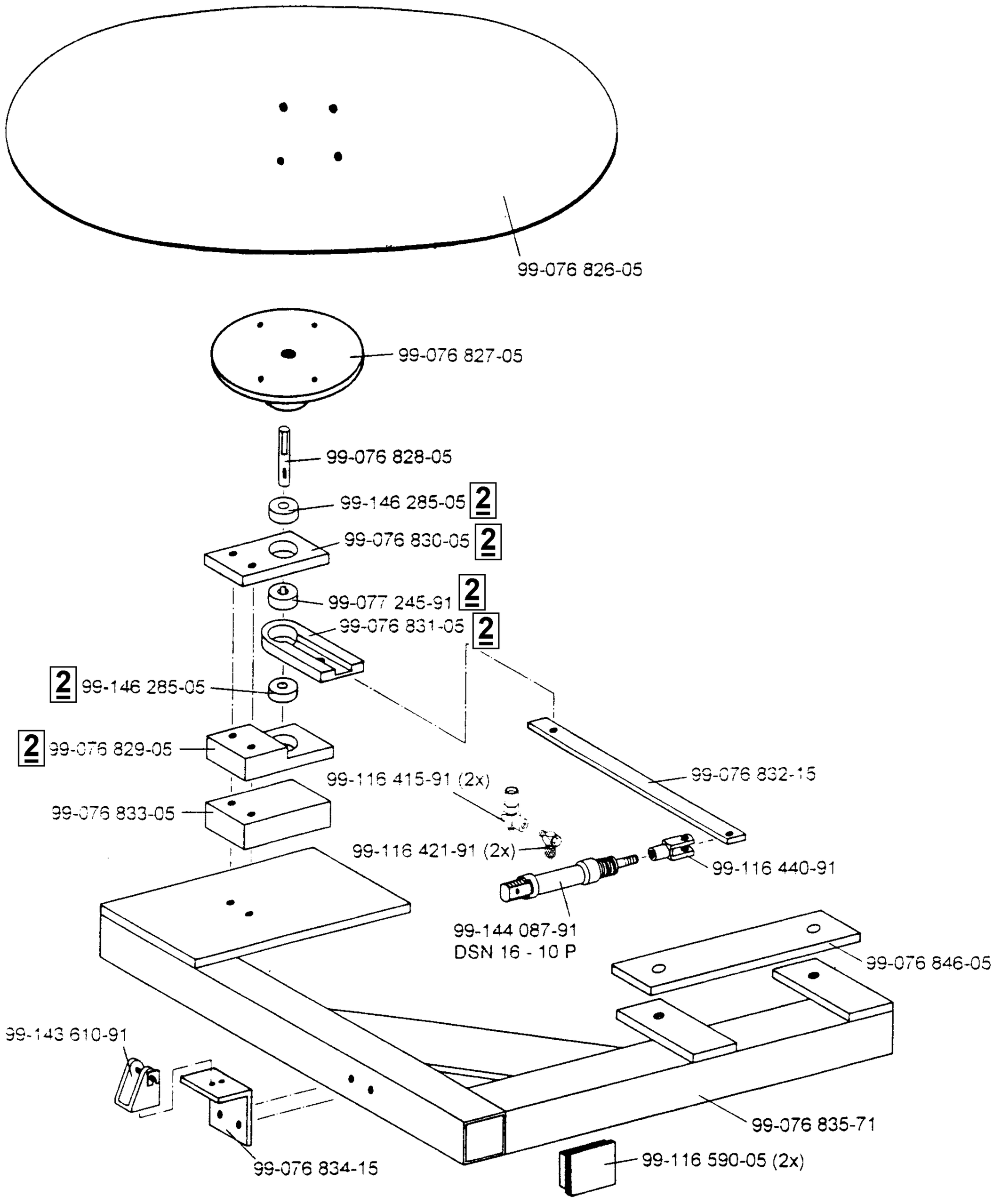
99-076 826-05
99-076 827-05
99-076 828-05
99-146 285-05 2
99-076 830-05 2
99-077 245-91 2
99-076 831-05 2
2 99-146 285-05
2 99-076 829-05
99-076 833-05
99-116 415-91 (2x)
99-076 832-15
99-116 421-91 (2x)
99-116 440-91
99-144 087-91
DSN 16 - 10 P
99-076 846-05
99-143 610-91
99-076 835-71
99-076 834-15
99-116 590-05 (2x)

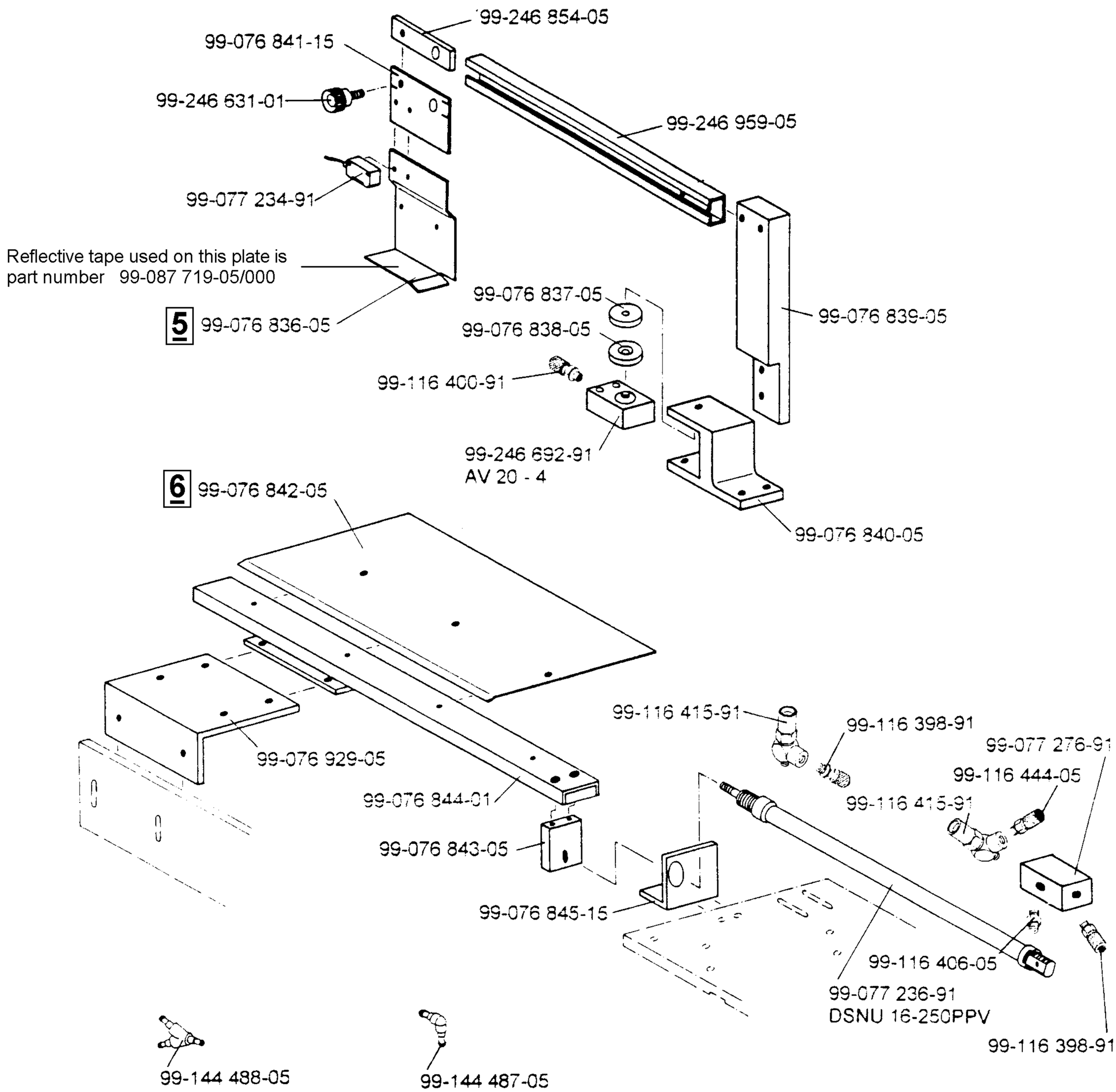
99-246 854-05
99-076 841-15
99-246 631-01
99-246 959-05
99-077 234-91
Reflective tape used on this plate is
part number 99-087 719-05/000
99-076 837-05
5
99-076 836-05
99-076 838-05
99-076 839-05
99-116 400-91
99-246 692-91
AV 20 - 4
6
99-076 842-05
99-076 840-05
99-116 415-91
99-116 398-91
99-077 276-91
99-076 929-05
99-116 444-05
99-076 844-01
99-116 415-91
99-076 843-05
99-076 845-15
99-116 406-05
99-077 236-91
DSNU 16-250PPV
99-116 398-91
99-144 488-05
99-144 487-05

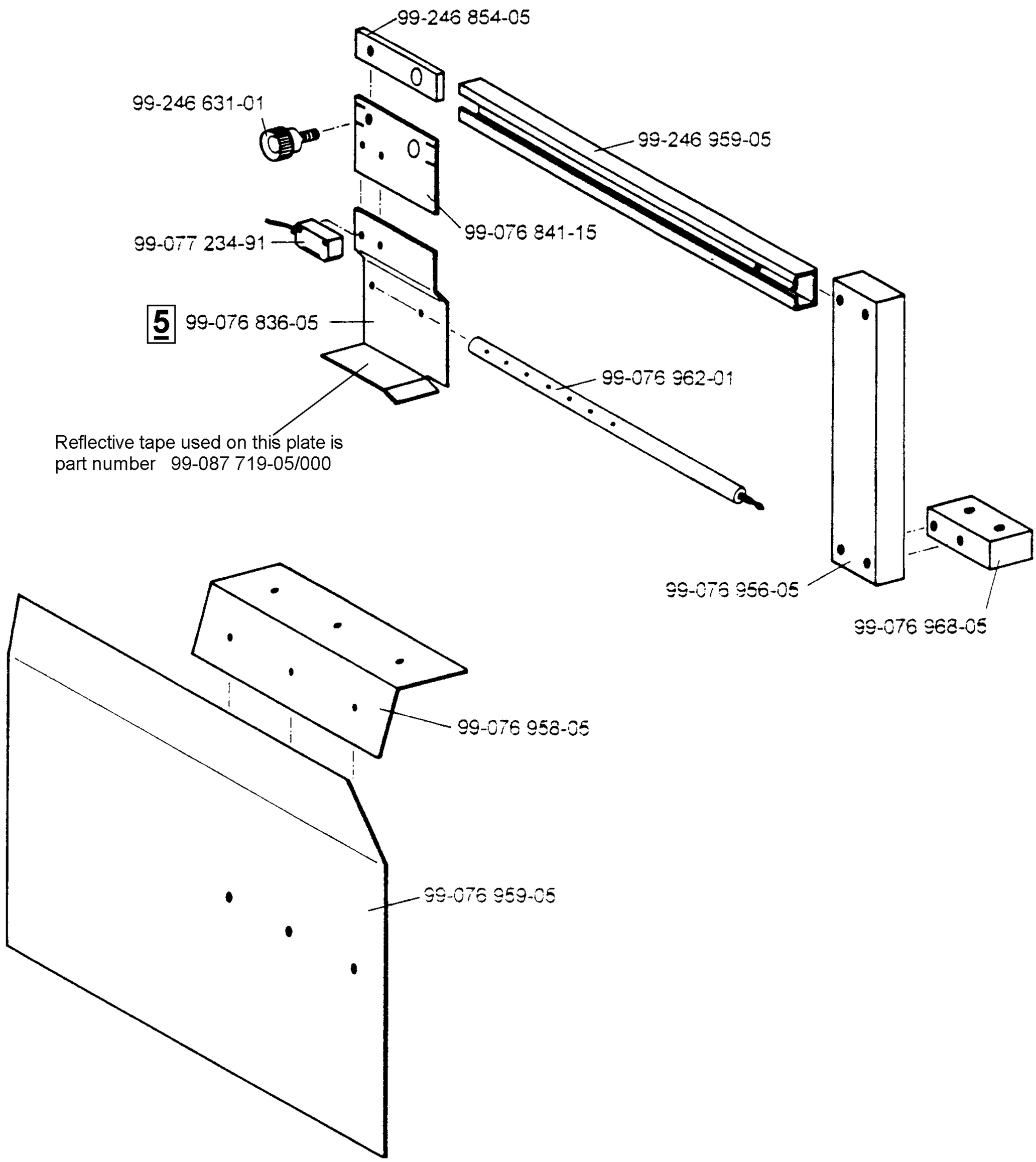
99-246 854-05
99-246 631-01
99-246 959-05
99-076 841-15
99-077 234-91
5
99-076 836-05
99-076 962-01
Reflective tape used on this plate is
part number 99-087 719-05/000
99-076 956-05
99-076 968-05
99-076 958-05
99-076 959-05

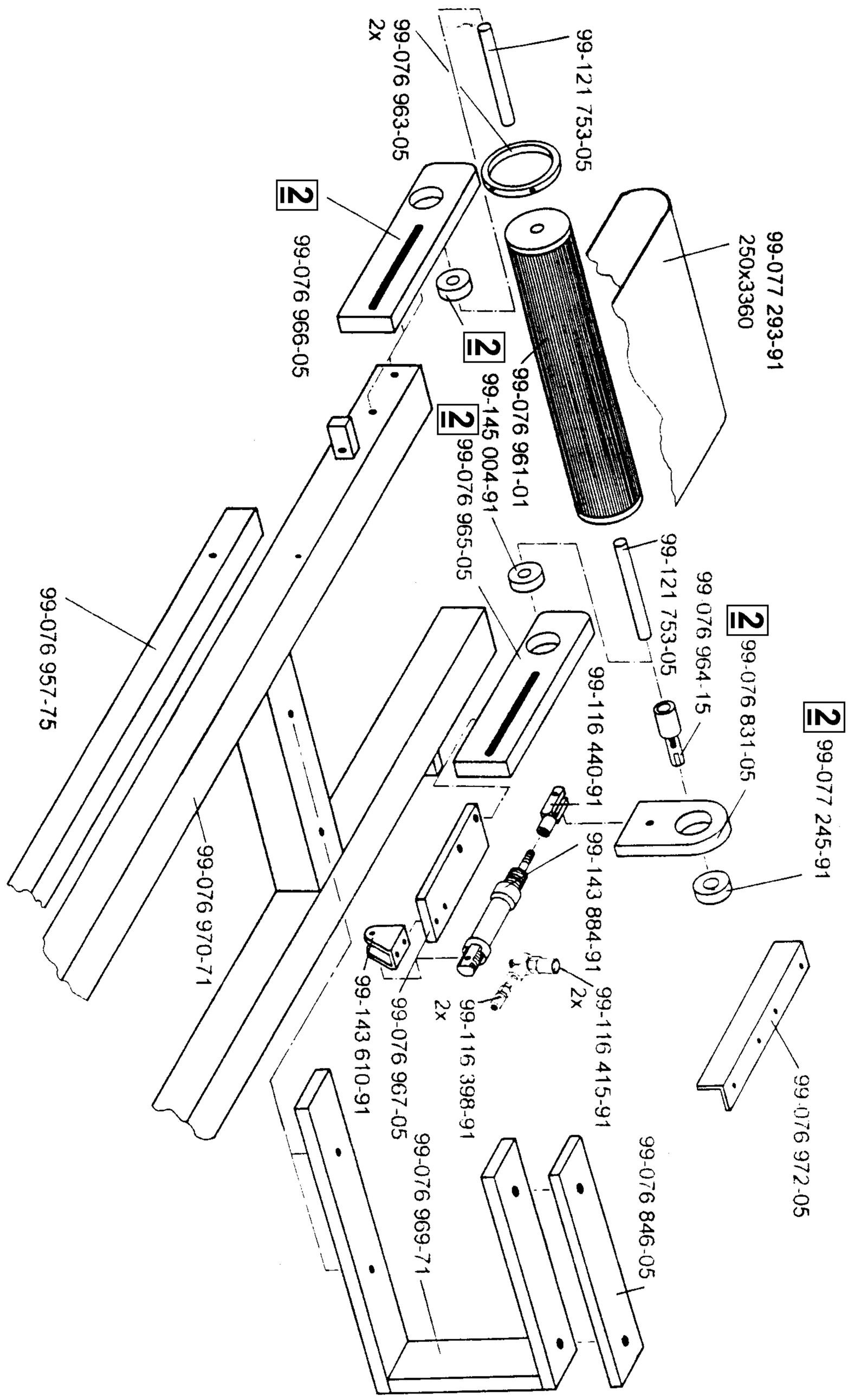
99-121 753-05
99-076 963-05
2x
99-077 293-91
250x3360
2
99-076 966-05
2
99-076 961-01
2
99-145 004-91
99-076 965-05
2
99-076 964-15
99-121 753-05
2
99-076 831-05
2
99-077 245-91
99-076 957-75
99-116 440-91
99-143 884-91
99-076 970-71
99-076 972-05
2x
99-116 415-91
99-143 610-91
2x
99-116 398-91
99-076 967-05
99-076 969-71
99-076 846-05

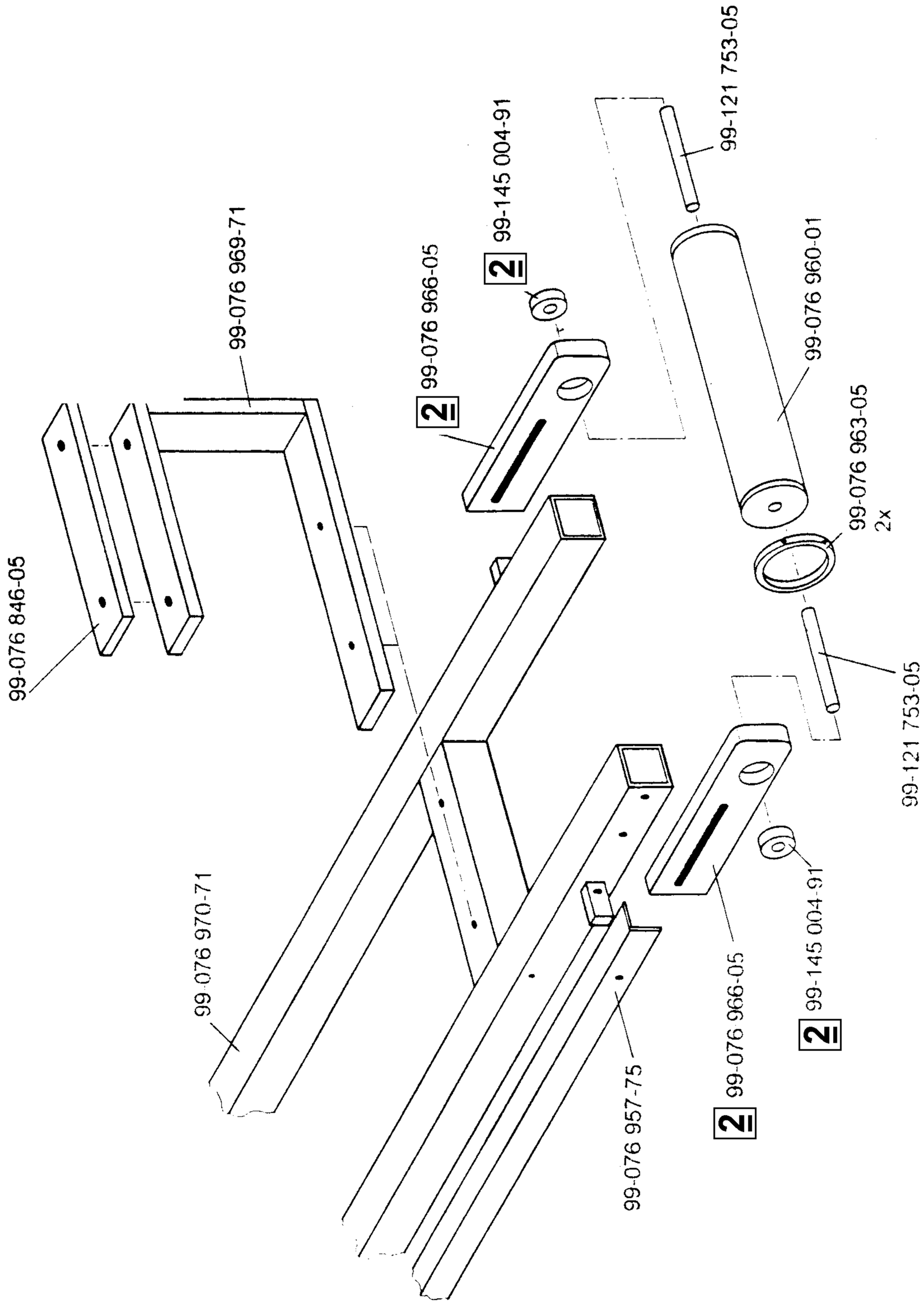
99-121 753-05
99-145 004-91
2
99-076 966-05
2
99-076 969-71
99-076 960-01
99-076 963-05
2x
99-076 846-05
99-121 753-05
99-076 970-71
99-076 966-05
2
99-145 004-91
2
99-076 957-75
2